COUNTY OF LAKE

UTILITIES DEPARTMENT

RULES AND REGULATIONS

March 2020

These Rules and Regulations
are subject to change at any
time. Please check with
LCDU to verify that this copy
is currently in effect. Last
modified by Resolution effective
3/2/2020

Table of Contents

SECTION 1 - GENERAL

DEFINITIONS 1-1

I. GENERAL 1-8

1.01. PRELIMINARY MATTERS 1-7

1.02. ASSESSMENT SANITARY SEWER AND WATER SUPPLY PROJECTS PROCEDURES 1-10

1.03. NON-ASSESSMENT SANITARY SEWER AND WATER SUPPLY PROJECTS PROCEDURES 1-13

1.04. BONDING AND INSURANCES 1-15

1.05. SEWER/WATER CONTRACTOR LICENSING 1-15

1.06. STANDARD NOTES FOR DRAWINGS 1-16

1.07. SUBSTITUTES AND “OR-EQUALS” 1-16

1.08. CHARGE FOR COPIES OF RULES AND REGULATIONS 1-18

1.09. PLAN SUBMISSION AND REVIEW 1-18

1.10. APPROVAL OF PLANS 1-19

1.11. GENERAL CONSTRUCTION, DESIGN REQUIREMENTS AND SPECIFICATIONS OF SANITARY SEWERAGE AND WATER SUPPLY IMPROVEMENTS 1-22

1.12. SHOP DRAWINGS 1-25

1.13. RECORD DRAWINGS (“AS-BUILTS”) 1-26

1.14. PRECONSTRUCTION CONFERENCE 1-26

1.15. PRECONSTRUCTION VIDEO TAPING 1-26

1.16. MONUMENTS/PROPERTY PINS 1-27

1.17. REPLACEMENT OF EXISTING INFRASTRUCTURE 1-27

1.18. TEMPORARY ENVIRONMENTAL CONTROLS 1-27

1.19. MAINTENANCE OF FLOW AND DRAINAGE 1-28

1.20. REMOVAL, REPAIR, AND TUNNELING OF TREES, SHRUBS, BUSHES AND OTHER LANDSCAPING ITEMS 1-29

1.21. DEWATERING REQUIREMENTS FOR TRENCHES AND OTHER EXCAVATIONS 1-29

1.22. PROTECTION OF COUNTY WATER SUPPLY AND SANITARY SEWER SYSTEMS (Excerpts from the Ohio Revised Code) 1-30

1.23. PROTECTION OF WETLANDS 1-30

1.24. TESTING FOR COMPACTION IN TRENCHES 1-31

1.25. REMOVAL OF EXCESS EXCAVATED MATERIALS 1-31
1.26. MANUFACTURER'S SERVICES 1-32
1.27. INSPECTION BY THE LAKE COUNTY DEPARTMENT OF UTILITIES 1-32
1.28. CLEANUP 1-32
1.29. SEEDING, RESTORATION AND LANDSCAPING 1-32
1.30. TEMPORARY ROADWAY AND SIDEWALK 1-33
1.31. WARRANTIES 1-33
1.32. OPERATION AND MAINTENANCE MANUALS 1-34
1.33. SPARE PARTS 1-34
1.34. PROJECT CLOSE-OUT 1-34

II. GENERAL – WATER SUPPLY 1-34
1.35. GENERAL 1-34
1.36. ADMINISTRATIVE 1-38
1.37. WATER RATES 1-42
1.38. HOMESTEAD EXEMPTION 1-44
1.39. WATER SERVICES (TAP AND SERVICE CONNECTIONS) 1-44
1.40. METERS RULES AND REGULATIONS 1-46
1.41. DISCONNECTING SERVICES AND REPAIRING BREAKS 1-52
1.42. FIRE PROTECTION SERVICE 1-53
1.43. CROSS CONNECTIONS 1-54

III. GENERAL – SANITARY SEWERAGE 1-54
1.44. SEWER RATES 1-54
1.45. SANITARY SEWER SERVICE CONNECTIONS 1-55
1.46. SANITARY SEWER TREATMENT PLANT CAPICITY FEE 1-60
1.47. DISPOSAL OF SEPTIC TANK WASTES 1-61

FORMS, EXHIBITS AND FIGURES

SECTION 2 - WATER DISTRIBUTION

GENERAL REQUIREMENTS 2-1

I. 2.00. WATER PLAN CRITERA 2-4
2.01. PIPE AND FITTINGS 2-1
2.02. POLYETHYLENE ENCASEMENT 2-5
2.03. PIPE INSULATION 2-5
2.04. PIPELINE MARKERS 2-5

2.05. STEEL ENCASEMENT PIPE 2-6
2.06. GATE VALVES 2-7
2.07. TAPPING SLEEVES AND VALVES 2-7
2.08. AIR RELEASE VALVES 2-5
2.09. VALVE BOXES 2-8
2.10. METER VAULTS 2-9
2.11. FLUSHING ASSEMBLIES 2-9
2.12. FIRE HYDRANTS 2-10
2.13. BACKFLOW PREVENTERS AND ENCLOSURES 2-12
2.14. BACTERIA SAMPLING AND FLUSHING ASSEMBLIES 2-13
2.15. SERVICE CONNECTIONS 2-13
2.16. BEDDING AND BACKFILL 2-16

II. INSTALLATION 2-16
2.17. PIPE LAYING AND HYDRANT INSTALLATION 2-16
2.18. TRENCHES 2-18
2.19. PROTECTION OF EXISTING UTILITIES 2-19
2.20. TRENCH PROTECTION 2-19
2.21. PIPE EMBEDMENT 2-20
2.22. BACKFILLING 2-20
2.23. CONNECTIONS TO MAINS 2-21
2.24. ROCK EXCAVATION 2-22
2.25. METERS AND SETTINGS 2-17
2.26. ELECTRICAL CIRCUIT FOR REMOTE METER REGISTERS 2-25

III. TESTING 2-26
2.27. DISINFECTION 2-26
2.28. PRESSURE AND LEAKAGE TEST 2-28
2.29. BACTERIOLOGICAL TESTS 2-28
2.30. COMPLETION OF TESTS 2-29

FIGURES

SECTION 3 - SANITARY COLLECTION

GENERAL REQUIREMENTS 3-1

I. MATERIALS 3-2
3.01. PIPE AND FITTINGS 3-2
3.02. POLYETHYLENE ENCASEMENT 3-8

3.03. PIPE INSULATION 3-8
3.04. PIPELINE MARKERS 3-8
3.05. STEEL ENCASEMENT PIPE 3-8
3.06. MANHOLES 3-9
3.07. FRAMES AND COVERS 3-11
3.08. DROP CONNECTIONS 3-12
3.09. SERVICE CONNECTIONS 3-12
3.10. COMBINATION AIR RELEASE/VACUUM VALVES AND MANHOLES 3-14
3.11. WASTEWATER PUMPING STATIONS 3-15
3.12. BEDDING AND BACKFILL 3-26

II. INSTALLATION 3-26

3.13. TRENCHES 3-26
3.14. PROTECTION OF EXISTING UTILITIES 3-28
3.15. TRENCH PROTECTION 3-29
3.16. PIPE EMBEDMENT 3-29
3.17. PIPE LAYING 3-30
3.18. BACKFILLING 3-31
3.19. CONNECTIONS TO STRUCTURES AND PIPES 3-33
3.20. ROCK EXCAVATION 3-33
3.21. SERVICE CONNECTIONS 3-33
3.22. PUMPING STATION INSTALLATION 3-34

III. TESTING 3-35

3.23. TESTING FOR DEFLECTION (GRAVITY SEWERS) 3-35
3.24. TESTING FOR LEAKAGE (GRAVITY SEWERS) 3-36
3.25. PRESSURE AND LEAKAGE TESTS (FORCE MAINS) 3-37
3.26. TESTING FOR PUMPING STATIONS 3-38
3.27. TELEVISION INSPECTION 3-39
3.28. COMPLETION OF TESTS 3-40

FIGURES

SECTION 4 - SOLID WASTE ACCEPTANCE

4.01. PURPOSE 4-1
4.02. REFERENCES 4-1
4.03. DEFINITIONS 4-1

4.04. POLICIES 4-4
4.05. PROCEDURES 4-8
4.06. RESPONSIBILITIES 4-8
4.07. SPECIAL WASTE CLEARANCE 4-9
4.08. OPENING A SOLID WASTE DIVISION ACCOUNT 4-9

EXHIBITS

SECTION 5 - PRETREATMENT AND SEWER USE

I. GENERAL PROVISIONS 5-1
5.01. PURPOSE AND POLICY 5-1
5.02. ADMINISTRATION 5-1
5.03. DEFINITIONS 5-5

II. GENERAL SEWER USE REQUIRMENTS 5-15
5.04. PROHIBITED DISCHARGE STANDARDS 5-15
5.05. OIL AND GREASE INTERCEPTORS 5-18
5.06. GENERAL PROVISIONS – FOG REQUIREMENTS 5-18
5.07. GENERAL LIMITATIONS, PROHIBITATIONS AND REQUIREMENTS ON FATS, OI, & GREASE (FOG) DISCHARGES 5-19
5.08. COMMERCIAL NON RESIDENTIAL PROPERTIES 5-21
5.09. SEWER SYSTEM OVERFLOWS (SSOs), ABATEMENT ORDERS AND COST RECOVERY (CLEANUP COSTS) 5-21
5.10. FACILITY REQUIREMENTS 5-22
5.11. GREASE TRAP REQUIREMENTS 5-23
5.12. GREASE TRAP MAINTENANCE REQUIREMENTS 5-23
5.13. MONITORING FACILITIES REQUIREMENTS 5-24
5.14. REQUIREMENTS FOR BEST MANAGEMENT PRACTICES 5-24
5.15. CATEGORICAL PRETREATMENT STANDARDS 5-25
5.16. LOCAL LIMITATIONS 5-26
5.17. STATE REQUIREMENTS 5-27
5.18. RIGHT OF REVISION 5-27
5.19. DILUTION PROHIBITION 5-27

III. PRETREATMENT OF WASTEWATER 5-27
5.20. PRETREATMENT FACILITIES 5-27
5.21. HIGH STRENGTH WASTEWATER 5-28
5.22. AUTHORITY FOR CONTROL OF WASTEWATER DISCHARGES 5-29
5.23. ACCIDENTAL DISCHARGE AND SLUG LOAD CONTROL 5-29

5.24. OPERATING UPSET 5-33
5.25. BYPASSES 5-33

IV. INDUSTRIAL WASTEWATER DISCHARGE PERMITS 5-34
5.26. DISCHARGE PERMIT REQUIREMENTS 5-34
5.27. PERMIT APPLICATION 5-35
5.28. PRETREATMENT PERMIT CONTENTS 5-36
5.29. PERMIT ISSUANCE PROCESS 5-38

V. COMPLIANCE MONITORING AND REPORTS 5-40
5.30. BASELINE MONITORING REPORTS 5-40
5.31. COMPLIANCE DATE REPORTS 5-41
5.32. PERIODIC COMPLIANCE REPORTS 5-42
5.33. NOTIFICATION OF CHANGED DISCHARGE 5-44
5.34. MONITORING FACILITIES 5-44
5.35. INSPECTION AND SAMPLING 5-44

VI. CONFIDENTIAL INFORMATION 5-45

VII. ENFORCEMENT 5-45
5.36. ADMINISTRATIVE ENFORCEMENT REMEDIES 5-45
5.37. JUDICIAL REMEDIES 5-48

VIII. RECORDS RETENTION 5-49

SECTION 6 - APPROVED EQUIPMENT & MATERIAL

SECTION 6 HAS BEEN REMOVED FROM THE RULES AND REGULATIONS. THE APPROVED MATERIALS LIST CAN BE FOUND ON THE LAKE COUNTY DEPARTMENT OF UTILITIES WEBSITE AT:

http://www.lakecountyohio.gov/utilities/RulesRegulations.aspx

SECTION 7 - FEE SCHEDULE

Section 1 – General

DEFINITIONS 1-1

I. GENERAL 1-7

1.01. PRELIMINARY MATTERS 1-7

A. Purpose 1-7

B. Conflicts With Other Regulations 1-8

C. Relationship With Other Rules And Regulations 1-8

D. Severability 1-8

E. Appeals Board 1-8

F. Rules And Regulations Review Board 1-8

1.02. ASSESSMENT SANITARY SEWER AND WATER SUPPLY PROJECTS PROCEDURES 1-10

1.03. NON-ASSESSMENT SANITARY SEWER AND WATER SUPPLY PROJECTS PROCEDURES ETC. 1-12

1.04. BONDING AND INSURANCES 1-14

1.05. SEWER/WATER CONTRACTOR LICENSING 1-14

1.06. STANDARD NOTES FOR DRAWINGS 1-16

1.07. SUBSTITUTES AND “OR-EQUALS” 1-16

A. General 1-16

B. “Or-Equal” Items 1-16

C. Substitute Items 1-17

D. Substitute Construction Methods Or Procedures 1-18

1.08. CHARGE FOR COPIES OF RULES AND REGULATIONS 1-18

1.09. PLAN SUBMISSION AND REVIEW 1-18

1.10. APPROVAL OF PLANS 1-22

1.11. GENERAL CONSTRUCTION, DESIGN REQUIREMENTS AND SPECIFICATIONS OF SANITARY SEWERAGE AND WATER SUPPLY IMPROVEMENTS 1-25

1.12. SHOP DRAWINGS 1-27

1.13. RECORD DRAWINGS (“AS-BUILTS”) 1-28

1.14. PRECONSTRUCTION CONFERENCE 1-29

1.15. PRECONSTRUCTION VIDEO TAPING 1-29

1.16. MONUMENTS/PROPERTY PINS 1-29

1.17. REPLACEMENT OF EXISTING INFRASTRUCTURE 1-30
1.18. TEMPORARY ENVIRONMENTAL CONTROLS 1-30
1.19. MAINTENANCE OF FLOW AND DRAINAGE 1-31
1.20. REMOVAL, REPAIR, AND TUNNELING OF TREES, SHRUBS, BUSHES AND OTHER LANDSCAPING ITEMS 1-32
1.21. DEWATERING REQUIREMENTS FOR TRENCHES AND OTHER EXCAVATIONS 1-32
1.22. PROTECTION OF COUNTY WATER SUPPLY AND SANITARY SEWER SYSTEMS (Excerpts from the Ohio Revised Code) 1-33
A. ORC 6103.02 1-33
B. ORC 6103.30 1-33
C. ORC 6117.01 1-33
D. ORC 6117.45 1-33
1.23. PROTECTION OF WETLANDS 1-33
1.24. TESTING FOR COMPACTION IN TRENCHES 1-34
1.25. REMOVAL OF EXCESS EXCAVATED MATERIALS 1-34
1.26. MANUFACTURER'S SERVICES 1-35
1.27. INSPECTION BY THE LAKE COUNTY DEPARTMENT OF UTILITIES 1-35
1.28. CLEANUP 1-35
1.29. SEEDING, RESTORATION AND LANDSCAPING 1-35
A. General Requirements 1-35
B. Grass 1-35
C. Landscaping 1-37
D. Landscaping Guaranty 1-37
1.30. PAVEMENT REPLACEMENT 1-37
1.31. TEMPORARY ROADWAY AND SIDEWALK 1-38
1.32. WARRANTIES 1-38
1.33. OPERATION AND MAINTENANCE MANUALS 1-38
1.34. SPARE PARTS 1-39
1.35. PROJECT CLOSE-OUT 1-39

II. GENERAL – WATER SUPPLY 1-39

1.36. GENERAL 1-39
A. Consent To Rules And Regulations 1-39
B. County Not Liable For Damage Caused By Interruption Of Service 1-39
C. No Guarantee Of Supply Or Pressure 1-40
D. Chemical, Physical, And Bacteriological Characteristics 1-40

E. Entrance To Premises 1-39
F. Tanks For Reserve Supply Should Be Provided 1-39
G. Notification Of Water Turn-Off To Mains 1-40
H. Stoppage Of Water Service Because Of Leakage, Etc 1-40
I. Turn Off Of Water To Customer 1-40
J. Re-establishment Of Water Service To Customer 1-41
K. Razing Of Building – Abandoned Services 1-41
L. Discontinuance Of Service To Enforce Rent Payment, Etc. 1-42
M. Damages Due To Leaks 1-42
N. Pumping On Private Premises 1-42
O. Application Of Billing Rules 1-42
1.37. ADMINISTRATIVE 1-43
A. Types Of Accounts 1-43
B. Application And Contract For Water Service 1-43
C. Water May Be Refused Delinquent Persons 1-43
D. Bankruptcy Proceedings 1-44
E. Billing and Collection Periods 1-44
F. Time Limit On Payments 1-44
G. Estimated Bills 1-44
H. No Partial Payments Accepted 1-45
I. Bills Must Be Paid In The Order Contracted 1-45
J. Extension Of Time Payment 1-45
K. First Bill – New Account 1-45
L. Final Bills 1-45
M. Turn Offs/Turn Ons 1-46
N. Delivery Of Bills 1-46
O. Listing Properties 1-46
P. Water May Be Shut Off Against Delinquents 1-46
Q. Water May Be Turned Off At Main For Protection And Charge Therefor 1-46
R. Adjustment Of Bills And Billing Review Board 1-46
S. Water For Public Improvements, When To Be Paid 1-46
T. Seasonal Accounts 1-46
U. Providing Notice To A Purchaser Of Real Property As To The Status Of The Water And Sewer Account 1-47
V. Minimum Charge For Water Accounts For Unoccupied Property 1-47

1.38. WATER RATES 1-47
A. Permit For Use Of Water 1-47
B. Water Rates, Meter Fees And Tap-In Fees 1-47
C. Free Service 1-47
D. Leased Premises 1-47
E. Water Treatment Plant Capacity Fee 1-47
F. Billing Service Charge 1-49
1.39. HOMESTEAD EXEMPTION 1-49
1.40. WATER SERVICES (TAP AND SERVICE CONNECTIONS) 1-49
A. Application For The Installation Of Taps And Service Connections 1-49
B. Installation Of Taps And Service Connections 1-50
C. Only County Personnel To Operate Valves, Stops, Etc. 1-50
D. Payment For Taps And Service Connections 1-50
E. Charges For Installation Of Taps And Service Connections 1-50
F. Taps – Service Size – Materials 1-50
G. Taps – Service Size – Plastic 1-50
H. Repairs To Tap And Service Connections 1-50
I. Depth Of Pipe On Customer's Branch 1-50
J. Customer's Branch Location And Construction 1-51
K. Customer's Branch Leaks 1-51
L. Limiting Size Of Main To Be Tapped 1-51
M. Maintenance Of Service Lines 1-51
N. Attachment Of Wire To Services Forbidden 1-51
O. New Water Service Inspection Requirements 1-51
1.41. METERS RULES AND REGULATIONS 1-51
A. Service To Be Metered 1-51
B. Services Not Required To Be Metered 1-52
C. Maintaining Metering Systems 1-52
D. Entering Properties For Operation Of Metering Systems 1-52
E. Access To Property For Operation Of Metering Systems 1-52
F. Meter, Number Allowed 1-52
G. Sanitary Sewer Deduct Meter 1-52
H. Installation Of Meters By LCDU Only 1-53
I. Removal Of Meters 1-54
J. Meters Subject To Inspection 1-54
K. Attachments 1-54

L. Meters Shall Be Accessible 1-54
M. Customer To Protect The Meter From Freezing, Vandalism or Other Type Of Negligence 1-54
N. Meter Repairs And Charges 1-54
O. Tampering With Meter 1-54
P. Type Of Metering System 1-55
Q. All Water Must Be Metered 1-55
R. Meter To Be Approved By The County 1-55
S. Bypasses On Meter Settings 1-55
T. Limitation Of One Customer To Each Service 1-55
U. Meter Settings and Locations 1-55
V. Testing Of Meters 1-55
W. Remote Register Installation For Homes With Finished Basements 1-56
X. Installation Regulations 1-56
Y. Temporary Water Service 1-56
Z. Temporary Bulk Water 1-56
AA. Temporary Water Service Rental Meters 1-57
1.42. DISCONNECTING SERVICES AND REPAIRING BREAKS 1-57
A. Permissions 1-57
B. Procedure For Disconnecting Services And Repairing Breaks 1-57
C. Installation And Repairing Of Mains 1-58
D. Temporary Discontinuance Of Service 1-59
1.43. FIRE PROTECTION SERVICE 1-59
A. Fire Service Plans 1-59
B. Fire Line 1-59
C. Fire Pumps 1-60
D. Metered Supply 1-60
E. Air Gap 1-60
F. Metering Of Jockey Pump 1-60
G. Low Pressure Cut-Off Switch 1-60
H. Unauthorized Use 1-60
I. Rate Schedule 1-60
J. Backflow Prevention Of Fire Lines 1-60
1.44. CROSS CONNECTIONS 1-60

III. GENERAL – SANITARY SEWERAGE 1-61

1.45. SEWER RATES 1-61

1.46. SANITARY SEWER SERVICE CONNECTIONS 1-61
1.47. WASTEWATER TREATMENT PLANT CAPACITY FEE 1-65
1.48. DISPOSAL OF SEPTIC TANK WASTES 1-67
A. Prohibitive Discharges 1-67
B. Permitted Discharges..... 1-67
C. Permit Fee..... 1-67
D. Disposal Fee 1-67
E. Penalty Provisions..... 1-67

FORMS, EXHIBITS AND FIGURES

Form 1.01.E APPEALS BOARD APPLICATION 1-68
Form 1.38.U STATUS OF WATERAND/OR SEWER ACCOUNT . 1-69
Form 1.39.D WATER/SEWER BILLING AGREEMENT 1-70
Form 1.42.G APPLICATION FOR SEWER DEDUCT METER INSTALLATION..... 1-71
Form 1.46 APPLICATION FOR REDUCED SEWER SERVICE CHARGE..... 1-72

Exhibit A GENERAL WATER NOTES
Exhibit B GENERAL SANITARY SEWER NOTES
Exhibit C GENERAL WATER SERVICE CONNECTION PROCEDURES
Exhibit D AGREEMENT GOVERNING SANITARY SEWER LATERAL EXTENSION PRIOR TO FINAL CONNECTION
Exhibit E APPLICATION FOR USE OF “OR-EQUAL ITEM”
Exhibit F APPLICATION FOR USE OF SUBSTITUTE ITEM
Exhibit G RECORD DRAWINGS CONTENTS LIST
Exhibit H MANUFACTURER’S SERVICE REPRESENTATIVE’S REPORT
Exhibit J SCHEDULE OF RATES OF FLOW, QUANTITY AND ACCURACY LIMIT OF METERS FOR TESTING
Exhibit K ACCURACY OF METERS
Exhibit L APPLICATION FOR SEWER AND WATER BUILDERS LICENSE
Exhibit M LCDU SECTION 1.01(E) APPEALS BOARD RULES OF PROCEDURE
Exhibit N APPLICATION FOR FUTUREE ASSESSMENTS AND/OR EXTENSION OR TAP-IN FEES AND SERVITUDE
Exhibit O APPLICATION FOR TAP-IN REINBURSMENT

Exhibit P DEPARTMENT WIDE PIPE COLOR-CODING STANDARD

Exhibit Q GUIDE DOCUMENT FOR SIZING AND INSTALLATION OF GREASE INTERCEPTORS

Figure 1.41.1 1 ½" OR SMALLER WATER SERVICE CONNECTION LIMITS OF RESPONSIBILITY

Figure 1.41.2 2" OR GREATER WATER SERVICE CONNECTION LIMITS OF RESPONSIBILITY

Figure 1.47.1 SANITARY SERVICE CONNECTION LIMITS OF RESPONSIBILITY

to locate existing utilities

SECTION 1 – GENERAL SEWER AND WATER

DEFINITIONS

Adequate water supply shall mean that the existing supply of water meets the minimum standards as set by the Insurance Services Office of Ohio. Should an area water supply be below the I.S.O. standard, then new connections or main extension requests may be denied. It shall be the duty of the contractor or their consultant to propose water system improvements that will cause water availability to improve to meet I.S.O. standards. Water supply adequacy of the existing system must be determined by flow tests made at or near the proposed site from street hydrants and under actual or simulated peak consumption conditions.

Administrative Fee shall mean the assessment in addition to the quarterly billing to a customer's water and/or sewer account when general compliance is not met, or a customer's water and/or sewer account balance is 90 days or greater in arrears and transferred to the real property taxes.

Adjacent Buildings shall mean a group of two or more buildings not separated by any street, avenue, thoroughfare, alley, or other public way.

Adjacent Horizontally shall mean units side by side in the same building.

Adjacent Vertically shall mean units constructed one above another in the same building.

Appeals Board shall mean three (or more) persons appointed by the Lake County Department of Utilities who shall hear and decide appeals in accordance with Section 1.01E of these Rules and Regulations.

Approving Authority shall mean the LCDU, or a duly authorized deputy, agent or representative of the LCDU.

Backflow shall mean the flow of water or other liquids, mixtures, or substances into the distribution pipes of a potable water supply from any source other than the intended source of the potable water supply.

Beneficial Use shall mean a use of water, including, but not limited to, the method of diversion, storage, transportation, treatment and application, that is reasonable and consistent with the public interest in the proper utilization of water resources, including, but not limited to, domestic, agricultural, industrial, commercial non residential, power, municipal, navigational, fish and wildlife, recreational uses and fire suppression.

Billing Review Board shall mean three (or more) persons appointed by the LCDU shall meet with customers requesting their utilities bill be reviewed.

Biochemical Oxygen Demand (abbreviated as BOD) shall mean the quantity of oxygen, expressed in mg/l, utilized in the biochemical oxidation of organic matter under standard laboratory conditions for five days at a temperature of 20 degrees Centigrade. The laboratory

determinations shall be made in accordance with procedures set forth in “Standard Methods”, defined in this section.

Building Drain shall mean that part of the lowest horizontal piping of a drainage system that receives the discharge from soil, waste, and other drainage pipes inside the walls of the building and conveys it to the building sewer, beginning five (5) feet outside the inner face of the building wall.

Building Sewer shall mean the extension of the building drain to the public sewer or other place of disposal.

Chlorine Requirement shall mean the amount of chlorine, in parts per million by weight, which must be added to water to produce a specified residual chlorine content, or to meet the requirements of some other objective, in accordance with procedures set forth in “Standard Methods”.

Cleanout shall mean a pipe rising from the residential sanitary sewer lateral to just below the ground surface with a removable cap or plug. It is used to access the sewer lateral to free blockages. A sewer cleanout is usually located near the property line. There may be an additional sewer cleanouts at various other locations on a property. See Fig. 3.14.8.

Commissioners shall mean the Lake County Board of Commissioners.

Condominium Association shall be considered a single parcel for the purposes of the application of these rules. However, the individual units that make up the association may be treated as individual parcels, by the Lake County Department of Utilities, in the event that the Condominium Association is determined to be in violation of these rules by the Lake County Department of Utilities and/or the Board of Lake County Commissioners.

Cost shall mean an estimate of the expenditure by the County for labor, benefits, material, engineering, supervision, motor vehicles, tools, overhead and any other expenditures incidental thereto, to the extent that any or all of such items are applicable in the particular situation involved.

County shall mean Lake County, acting through its Board of Commissioners and the LCDU.

Cross-Connection shall mean any arrangement whereby backflow can occur.

Customer shall mean a person who has contracted (whether oral or written, expressed or implied) for water service or sanitary sewer service to be supplied to one premises. When, under the provisions of 1.38, the same person is required to make more than one contract for service, he shall, for the purposes of these Rules and Regulations, be deemed to be a separate customer with respect to each such required contract.

Disposal System shall mean a system for disposing sewage, industrial waste, or other wastes, and includes sewerage systems and treatment works.

Districts shall mean the sewer and water districts in Lake County, Ohio, as they now exist or hereafter may be enlarged or modified by the County.

Engineer shall mean the LCDU or its authorized representative.

Ether-Soluble Matter shall mean oil and grease which is soluble in ether, as measured in a laboratory procedure made in accordance with the method set forth in “Standard Methods”.

Industrial Waste shall mean any liquid, gaseous or solid waste substance resulting from any process of industry, manufacture, trade, or business, or from the development, processing, or recovery of any natural resource, together with such sewage as is present, which pollutes the waters of the state.

Industrial Water Pollution Control Facility shall mean any disposal system or any treatment works, pretreatment works, appliance, equipment, machinery, or installation constructed, used or placed in operation primarily for the purpose of reducing, controlling, or eliminating water pollution caused by industrial waste, or for reducing, controlling, or eliminating the discharge into a disposal system of industrial waste or what would be industrial waste if discharged into the waters of the state.

Lake County Plant shall mean that unit of the district which supplies filtered-water service to Eastlake, Willoughby, Wickliffe, Willowick, Lakeline, Timberlake, Willoughby Hills, North Perry Village, Perry Village, portions of Madison Township, Perry Township, and Painesville Township and other areas supplied with treated water by the LCDU.

LCDU shall mean the Lake County Department of Utilities.

Member Community shall mean any municipal corporation which has adopted a consent ordinance to be included in the District, and which has been accepted for inclusion into the District by the Commissioners.

Natural Outlet shall mean any outlet into a watercourse, pond, ditch, lake, or other body of surface or ground water.

Normal Sewage shall mean sewage which after analysis shows by weight a daily average of not more than 280 mg/l of suspended solids; and not more than 240 mg/l of BOD.

Operating Expenses shall mean, for any specified period, all reasonable or necessary current expenses of maintaining, repairing, operating and managing the water-works system, wastewater system, or solid waste facility for such period, as determined in accordance with generally accepted accounting principles, including but not limited to all salaries; administrative, architectural, engineering, advertising, auditing and legal expenses; insurance and surety bond premiums; payments to pension, retirement, health and hospitalization funds; consultants fees and charges; any taxes which may lawfully be imposed on the water-works system or the income or operation thereof; rentals of equipment or other property; lease payments for real property or interest thereunto; usual expenses of maintenance and repair; reasonable reserves for maintenance and repair; and all other expenses ordinary, necessary or incidental for the efficient

operation of the water-works system, wastewater system, or solid waste facility but only to the extent properly attributable to the water-works system, wastewater system, or solid waste facility, provided, however, that Operating Expenses shall not include any Capital Costs.

Other Wastes shall mean garbage, refuse, decayed wood, sawdust, shavings, bark, and other wood debris, lime (except hydrated or dehydrated lime), sand, ashes, offal, night soil, oil, tar, coal dust, or silt, and other substances which are not included within the definitions of sewage and industrial waste set forth in this section, which pollute the waters of the state.

Overhead shall mean the indirect cost of doing business. *Overhead costs* include all costs other than direct materials and direct labor.

Owner shall mean a person holding the fee or life estate, or an undivided interest in the fee or life estate, in any premises that are, or are about to be, supplied with water and/or sanitary service by the County.

Peak 30 Day Average Flow shall mean the maximum average daily flow measured, calculated or anticipated for a property or facility determined over a 30 day period.

Parts Per Million (ppm) shall mean a weight-to-weight ratio; the parts-per-million value multiplied by the factor 8.345 shall be equivalent to pounds per million gallons of water.

Permanent Structure shall mean a structure that will remain in place for one or more years and is constructed upon a foundation 2 feet deep or deeper.

Person can mean the state, any municipality corporation, notwithstanding Section 6111.11 of the Revised Code, political subdivision, public or private corporation, individual, partnership, or other entity.

pH shall mean the logarithm (base 10) of the reciprocal of the hydrogenation concentration expressed in moles per liter. It shall be determined by one of the procedures outlined in “Standard Methods”.

Pollution shall mean the placing of any noxious or deleterious substances in any waters of the state that renders such waters harmful or inimical to the public health, to animal or aquatic life, to the use of such waters for domestic water supply, to industrial or agricultural purposes, or to recreational purposes.

Premises shall mean the physical property to be served. Each of the following together with the lot or parcel of land upon which it is located, or such portion of such land as is used or held for use with it, shall constitute a premises:

A. One building, designed for single-family occupancy as a residence, including any portion thereof used by the resident for professional or business purposes.

B. A combination of adjacent buildings, of the same ownership, and designed for single-family occupancy as a residence, including any of such buildings and any portion of any such building used by the resident for professional or business purposes.

C. One building, designed for single-family occupancy both as residence and for professional or business purposes when the business or profession is conducted by the resident. (When not so conducted, subsection (H) or (J) below applies to the portion occupied for professional or business purposes.)

D. A combination of adjacent buildings, of the same ownership, and designed for single-family occupancy both as a residence and for professional or business purposes, when the business or profession is conducted by the resident. (When not so conducted, the portion occupied by the resident constitutes one premises, and (H) or (J) below applies to the portion occupied for professional or business purposes.)

E. One building, designed for single occupancy by a person conducting one business enterprise.

F. Adjacent buildings of the same ownership, and designed for single occupancy by a person conducting one business enterprise.

G. One dwelling unit designed for single-family occupancy, within a double house or within a multiple-unit flat or apartment building, where the several units are adjacent horizontally but none are adjacent vertically.

H. One room or suite of rooms designed or used for single occupancy by a person as one business enterprise within a multiple-unit building, where the several units are adjacent horizontally but none are adjacent vertically.

I. One building, or a part thereof, of the same ownership not qualified under paragraph (J), having two or more apartments, where any apartments are adjacent vertically. (Tenants' individual apartments may be separately metered at owner's expense.)

J. Where one building, or a part thereof, of the same ownership, houses two or more of any of the following: office rooms and/or business rooms and/or apartments; and if any of such units are adjacent vertically, then each of the following shall constitute a premises:

   a. Each room or suite of rooms, located on the first floor of the building, designed or used for single occupancy by a person conducting one business enterprise.
   b. The remainder of the building collectively. (Tenants' individual units may be separately metered at owner's expense.) Except that if the entire first floor is occupied by the owner, then said building will constitute one premise.

K. A single lot, park, or playground, without any building thereon that would constitute one or more premises under any of the preceding paragraphs.

Public Sewer shall mean a sewer provided by or subject to the jurisdiction of the County and as accepted in writing by the County. It may include sewers within or outside the County boundaries that provide sewer service and ultimately discharge into the County sanitary sewer system even though those sewers may not have been constructed with County funds.

Public Water Supply shall mean wells, springs, streams, or other sources of water supply, pumping equipment, treatment or purification plants, distributing mains, cisterns, reservoirs,

necessary equipment for fire protection, other equipment and lands, rights-of-way, and easements necessary for the proper development and distribution of the supply.

Regulatory Agency shall mean governing agency. See definition of Governmental Agency, Revised Code.

Rules and Regulations shall mean rules, regulations, procedures and general specifications governing water and sewer systems under the jurisdiction of the LCDU.

Rules and Regulations Review Board shall mean five persons a committee from the LCDU Engineering staff who shall review and revise the rules, regulations, procedures and general specifications governing solid waste, water and sewer systems under the jurisdiction of the LCDU.

Sewer/Water Contractor shall mean a contractor licensed by the County to perform sewer and water projects within Lake County.

Service Area shall mean any and all area under the jurisdiction of the LCDU for water and sewer service.

Service Charge shall mean the basic assessment levied on all users of the public sewer system whose wastes do not exceed in strength the concentration values established as representative of “normal” usage. See “Normal Sewage”, defined in this section.

Service Line shall mean the line from the water main to the meter.

A. 1 ½” or less. See Figure 1.41.1.

1) Outside Meter Settings

LCDU Responsibility: That portion of the service line from the main to and including the meter vault including in such portion, any valve, meter, coupling and meter vault with its cover.

Property Owner Responsibility: That portion of the service line beyond the meter vault on the customer’s premises.

2) Inside Meter Settings

LCDU Responsibility: That portion of the service line from the main to and including the curb stop (or valve) and curb box.

Property Owner Responsibility: That portion of the service line from the curb box to the meter or meters. LCDU to provide meter.

B. Greater than 2”. See Figure 1.41.2.

Property owner responsible for entire service line from main to meter.

Sewage shall mean any substance that contains any of the waste products or excrementitious or other discharge from the bodies of human beings or animals, which pollutes the waters of the state.

Sewerage System shall mean pipelines or conduits, pumping stations, force mains, and all other constructions, devices, appurtenances, and facilities used for collecting and conducting water-borne sewage, industrial waste, or other wastes to a point of disposal or treatment.

Slug shall mean any discharge of water, sewage or industrial waste that, in concentration of any given constituent or in quantity of flow, exceeds for any period of duration longer than 15 minutes, more than 5 times its average hourly concentration or flow, and/or at a rate exceeding 1000 gallons per minute.

Standard Methods shall mean the examination and analytical procedures set forth in the most recent edition of "Standard Methods for the Examination of Water, Sewage, and Industrial Wastes", published jointly by the American Public Health Association, the American Water Works Association, and the Federation of Sewage and Industrial Wastes Associations.

Storm Sewer shall mean a sewer that carries storm, surface and ground water drainage but excludes sewage and industrial wastes.

Stormwater Runoff shall mean that portion of rainfall that is drained into sewers.

Surcharge shall mean the assessment in addition to the service charge that is levied on those persons whose wastes are greater in strength than the concentration values established as representative of normal sewage.

Suspended Solids shall mean solids that either float on the surface of, are in suspension or will settle in water, sewage, or industrial waste, and which are removed by a laboratory filtration device. Quantitative determination of suspended solids shall be made in accordance with procedures set forth in "Standard Methods".

Tenant shall mean any person, partnership, corporation, association or other organization occupying or having the right of occupancy of any premises without owning said premises and obtaining or applying for water and/or sewer service.

Treatment Works shall mean any plant, disposal field, lagoon, dam, pumping station, incinerator, or other works used for the purpose of treating, stabilizing, or holding sewage, industrial waste, or other wastes.

Unpolluted Water or liquids shall mean any water or liquid containing none of the following: free or emulsified grease or oil; acids or alkalines; substances that may impart taste-and-odor or color characteristics; toxic or poisonous substances in suspension, colloidal state or solution; odorous or otherwise obnoxious gases. It shall contain not more than 2500 parts per million by weight of dissolved solids and not more than 10 parts per million each of suspended solids or biochemical-oxygen-demand (BOD). Analytical determinations shall be made in accordance with procedures set forth in "Standard Methods".

Water Supplied shall mean all water passing from the main to the service line whether consumed by use or lost by waste or leakage.

Water Works shall mean any plant, lagoon, dam, pumping station, or other works used for the purpose of treating, stabilizing, or holding potable water.

Watercourse shall mean a channel in which a flow of water occurs, either continuously or intermittently.

Waters of the State shall mean all streams, lakes, ponds, marshes, watercourses, wells, springs, irrigation systems, drainage systems, and all other bodies or accumulations of water, surface and underground, natural or artificial, which are situated wholly or partly within, or border upon, this state, or are within its jurisdiction, except those private waters which do not combine or effect a junction with natural surface or underground waters.

I. GENERAL

1.01. PRELIMINARY MATTERS

A. Purpose - The Standards, as set forth herein, are intended for quality and uniformity of public and private infrastructure improvements. These Standards are intended to complement all City, County, State and Federal Standards and laws.

B. Conflicts With Other Regulations - When the provisions of this Standard are inconsistent with one another or when the provisions of this Standard conflict with provisions found in other adopted ordinances or regulations, the more restrictive provision shall govern.

C. Relationship With Other Ordinances And Regulations - It shall be the applicant's responsibility to determine and comply with all applicable City, County, State and Federal Ordinances. In addition the applicant shall comply with OSHA, NFPA, Ohio Administrative code, ANSI, and any other applicable codes and regulations. A Material Safety Data Sheet (MSDS) shall be provided to the Safety Office prior to any products being used or brought onto any Lake county property or job site.

D. Severability - If a court of competent jurisdiction declares that any Section, Division, Item, Paragraph or any portion thereof of these Rules and Regulations is invalid, that ruling shall not affect the validity of any other part of these Rules and Regulations or of the Rules and Regulations as a whole, which shall remain in full force and effect.

E. Appeals Board - Where it is alleged there is error in any order, requirement, decision or determination made by an administrative official in the enforcement of the LCDU Rules and Regulations, a person may request review of such error by the Appeals Board.

Any party desiring to appeal shall file a written request, (On Form 1.01.E herein) for appeal with the LCDU setting forth the grounds for the party's appeal. Such request for appeal shall be filed within thirty (30) calendar days after the LCDU's order, requirement, decision or determination has been made.

The Appeals Board will convene and review issues in a timely manner. The Appeals Board shall hold hearings in conformance with Rules of Procedures adopted by the Appeals Board. Such Rules of Procedure may be amended from time to time. Copies of the Rules and Procedures in effect for any appeal shall be mailed or delivered to the applicant for appeal at the time the appeal is filed. At any hearing on appeal the party appealing may appear in person, by other representative or present their position in writing.

In exercising its authority, the Appeals Board may, in conformity with the LCDU Rules and Regulations, reverse or affirm, wholly or partly, or may modify the order, requirement, decision or determination appealed from, and may make such order, requirement, decision or determination as the

Board may decide, and to that end has all powers of the administrative official from whom the appeal is taken. The decision of the Appeals Board shall be considered a final order.

F. Rules And Regulations Review Board

1. Powers and Functions - The powers and functions of the Rules and Regulations Review Board ("RRRB") with respect to administering these rules and regulations are as follows:

a. New Products – Residential, Commercial and Industrial

Review applications for new residential, commercial and industrial products and take final action relating to their compliance with all current applicable requirements of the LCDU.

b. Maintenance of Rules and Regulations

1) Review and evaluate proposed revisions, alterations, additions, and deletions as recommended by the Board of Commissioners, the LCDU, the County Prosecutor, any other County department, any other government agency, LCDU customers, and any individual or special interest group.

2) Develop additional recommendations for revisions, alterations, additions, and deletions based on the RRRB's experience with and their knowledge of the Rules and Regulations, and the application thereof.

3) Draft or have drafted any revisions, alterations, additions or deletions to the Rules and Regulations as found worthy of consideration, after the above review and development process.

4) Present the draft revisions, alterations, additions, and deletions to the Board of Commissioners along with any required supporting data, both pro and con, and the Review Boards recommendations for the disposition of each and all proposed changes. If The RRRB determines that no revisions, alterations, additions, or deletions are necessary, it shall report that fact to the Board of Commissioners. All amendments to the rules and regulations shall be through resolution of the Board of Commissioners.

2. Operations

a. Meetings and Rules

1) The RRRB shall meet on the first Monday in January of at least once each year that is not a legal holiday and shall elect one of its members as Chairman, a second member as Vice-Chairman, and a third member as Secretary. The Board shall hold such meetings, not less than one in any 12 calendar months, as it may determine. The RRRB may schedule and facilitate a year-end meeting in December of each year.

2) The elected Chairman, and in his absence the Vice-Chairman, shall be responsible for the proper administration of the Board's work and the elected Secretary shall keep, or cause to be kept, in the LCDU office, a complete and accurate record of all meetings and proceedings of the Board.

3) All suggestions, items of discussions, addenda items, etc. shall be addressed in writing to the Secretary of the RRRB. The Secretary shall compile an agenda for discussions at each RRRB meeting.

4) Three (3) members of the RRRB shall constitute a quorum.

5) A majority vote of the members present shall be required to take action.

6) In order to better carry out the provisions of this chapter, the RRRB by formal motion shall adopt rules for the conduct of its business.

3. Advice of Consultant - When requested by official action of the RRRB, the LCDU is hereby authorized and directed to employ a qualified, licensed professional consultant to consult with and assist the RRRB on any and all matters set forth in these Rules and Regulations. Such consultation and assistance shall be strictly advisory and the RRRB shall not be bound by the consultant's recommendation or opinion.

4. Five Year Comprehensive Review - Unless determined otherwise by the then sitting Board of Commissioners, request a full review of these rules and regulations, this may be performed by an outside consultant, shall be authorized during the first quarter of 2008, and every fifth year thereafter. A focus group of qualified community stakeholders in the Department of Utilities operations shall be convened to review and provide comment to the Board of Commissioners on the so revised Rules and Regulations document.

1.02. ASSESSMENT SANITARY SEWER AND WATER SUPPLY PROJECTS PROCEDURES

A. A resolution by the Commissioners establishing a sewer district.

B. Preparation of a general plan of water supply and/or sanitary sewerage for the sewer district and approval by the Commissioners and Ohio EPA.

C. Receipt by the Commissioners of a petition from a strong majority (as determined by the Lake County Board of Commissioners) of affected property owners, request of Township Trustees or Municipal officials and/or order of the Lake County Department of Health and/or Ohio EPA for a sanitary sewerage or water supply improvement.

D. Preparation of detailed plans, specifications, estimates of cost and tentative assessments for each improvement by the LCDU.

E. Assessment Determinations

1. Local water or sewer service will be to parcels fronting the improvement. The limits for local service are considered to be the areas within 250 feet of the centerline of the street right-of –way.
2. Assessments will be determined on parcels abutting the proposed improvement project.
3. All assessable frontage values used will be based on property deeds and tax records on file at the Lake County Recorder's Office.
4. The current local zoning ordinance will be used as a basis for development of the methodology for calculating tentative assessments based on either benefit front footage or benefit unit. LCDU will decide, based on the size and configuration of the assessment project, whether an assessment project is based on benefit front footage or benefit unit treatment plant capacity fee.
5. Assessable frontage for corner parcels larger than the minimum lot area will be determined based on the capability of subdividing the parcel in accordance with local zoning.
   a. Assessable frontage for parcels that cannot be subdivided is the shortest leg of the deeded frontage abutting the improvement.
   b. Assessable frontage for parcels that can be subdivided is the sum of frontage fronting the improvement along the centerline of the right-of-way to the centerline right-of way of the intersecting street, minus 250 feet.
6. Assessable frontage for parcels abutting the improvement where the improvement does not extend the length of the frontage will be assessed for the length of the improvement along the fronting property or the distance of the minimum lot width, whichever is greater.
7. Assessable frontage for flag-shaped parcels with deeded frontage less than the minimum lot width will be determined as follows:
   a. For vacant parcels, assessable frontage is the distance across the parcel at the 250-foot set back from the centerline of the right-of-way.
   b. For parcels developed within the 250-foot setback, assessable frontage is the distance across the parcel at the building setback.
8. Assessable frontage for parcels (except flag-shaped and corner parcels) with deeded lot frontage less than the minimum width is the distance

calculated across the parcel at the building setback line as determined by local zoning.

9. Assessable frontage for parcels excepting those described above is the deeded frontage.

F. Approval of the detailed plans, specifications, estimates of cost and tentative assessments by the Commissioners, County Sanitary Engineer, County Engineer, Soil and Water Conservation District, by the water supplier (if a water project), and local fire chief (if a water project), the municipality (if the project is within one), and Ohio EPA.

G. Passage and publication of a resolution of necessity by the Commissioners and notification of each property owner affected by the project and Clerk of Council of Municipality (if the project is within one) of the public hearing.

H. The Commissioners conduct a public hearing for all property owners who will be assessed or affected by the proposed improvement and hear endorsements and objections to the proposed improvement. The Commissioners also receive letters for five business days after the hearing from such property owners that state endorsements or objections to the proposed improvement.

I. Passage of a resolution determining to improve and proceed with the improvement by the Commissioners not sooner than five business days after the public hearing or in the alternative, a resolution determining not to proceed with the improvement by the Commissioners not sooner than five business days after the public hearing. Changes to the tentative assessment shall not be granted or made after this step.

J. Resolution to advertise for construction bids in a newspaper of general circulation in the County and on the County's website not sooner than ten (10) days after passage of resolution to proceed.

K. Receipt of construction bids by the Commissioners and tabulation of such bids by the LCDU.

L. Issuance of notes to finance the improvement by the Commissioners.

M. Award of the construction contract by the Commissioners to the lowest and best bidder.

N. Construction of the project.

O. Computation of the final cost of the project and the final assessments as determined in the same ratio as the final cost is to the Engineer's estimated cost. (In no case can the final costs or assessments exceed the estimated costs or tentative assessments at the time of the public hearing.)

P. Each property owner may pay his assessment without interest in cash or check to the LCDU during a 30-day period allowed by law following the Commissioners' approval of said assessments. Immediately after the Commissioners' approval of said assessment the LCDU mails a notice to each property owner stating the amount of this final assessment.

Q. Issuance of bonds and redemption of notes by the Commissioners.

R. Computation of final unpaid assessments including bond interest and certification of same to the Commissioners by the LCDU. Approval of final unpaid assessments as certified by the LCDU

including bond interest by the Commissioners and certification to the County Auditor for placing on the tax duplicate for collection.

1.03. NON-ASSESSMENT SANITARY SEWER AND WATER SUPPLY PROJECTS PROCEDURES IN THE CONSTRUCTION OF MAIN SANITARY SEWERS OR WATER MAINS TO CONNECT TO AN EXISTING SANITARY SEWERAGE OR WATER SUPPLY SYSTEM.

A. Consultation by the Developer or Owner with the LCDU and water supplier (if a water improvement) as to general requirements.

B. The Developer or Owner should prepare and submit detailed plans per Section 1.09, detailed plans, specifications, and estimates of cost as prepared by a Professional Engineer licensed in the State of Ohio for the project.

C. Review and approval of all plans and specifications by the LCDU, Municipality or Township Trustees (if located within one), Commissioners, Ohio EPA, Water Supplier (if a water improvement) and County Health Department (if a sanitary sewerage improvement) if separate entities. Plans for facilities in residential subdivisions will not be approved by the LCDU until preliminary approval of the plat of said subdivision has been given by the appropriate Planning Commission. PUD and PUD type developments will be governed by the rules established by the County Planning Commission.

D. Prior to construction, the Owner's Engineer shall complete and submit the shop drawing submittal form (Exhibit R) and detailed shop drawings, including pipe, fittings, valves, valve boxes, hydrant, pre-cast manhole and manhole step and casting details and information to the LCDU.

E. Submission of a performance bond or other satisfactory guarantee when required by the planning commission or by contract; deposit of estimated inspection costs; and necessary easements by the developer or Owner to the County when plans are submitted.

F. Construction of the project by a reputable and experienced contractor licensed as Sewer/Water Contractor. See Items 1.12, 1.28, 1.41, and 1.47 for inspection requirements.

G. Submission of one set of hard copy "as built" drawings to the LCDU by the Owner's Engineer prior to acceptance of the project by the Commissioners, and one electronic in accordance with acceptable standards of the LCDU.

H. Acceptance of the project by the Commissioners for operation by the LCDU or the Water Supplier (if a water improvement)

I. Upon the submission of a three year maintenance bond to the Commissioners by the Owner in the amount of ten per cent of the final construction costs as certified by the Owner's Engineer, the Commissioners will release the performance bond.

J. When any individual, organization or agency of private enterprise is granted permission by resolution of the Board of Lake County Commissioners to construct water or sewer lines, or both, in an unincorporated portion of the County, such resolution shall authorize the collection of prorated shares of the cost of such improvement in accordance with Ohio Revised Code Section 307.73 and as provided herein.

The board shall collect and return to such individual, organization or agency a prorated share of the cost of such improvement in any instance in which such improvement is tapped into by a nonparticipant. Reimbursement shall be administered by the LCDU and shall be subject to the following requirements, based on O.R.C. Section 307.73:

A. Prior to plan approval, the individual, organization or agency constructing the improvement shall, provide a project cost estimate prepared by a State of Ohio Registered Professional Engineer, including: separate costs for the eligible and ineligible portions of the project; a list of the participating and nonparticipating properties and/or sublots; and a "tentative tap in amount" list with an estimate of cost for each parcel within the project limits. A disbursement agreement shall also be provided.

B. A property shall be considered a nonparticipant and subject to the tap-in fee if the owner does not participate in the original construction and the property fronts on a portion of the improvement. The prorated share shall be based on the front footage or equal share of the improvement to the nonparticipant and shall not be in excess of the amount chargeable to such nonparticipant if such nonparticipant had participated in the original improvement.

C. Reimbursement payments shall be made into an escrow account established by the applicant and at an institution located in Lake County. The payments shall be distributed to participants per an agreement signed by all participants.

After completion of the improvement, the individual, organization or agency constructing the improvement shall submit a final accounting of all project costs including all receipts, payrolls, paid invoices and bills of lading required to prove its claim of cost for the portion of the improvement that is eligible for the tap-in reimbursement. As part of the final accounting, the entity constructing the improvement will hire a State of Ohio Registered Professional Engineer to prepare: a list of the participating and the nonparticipating properties that will be subject to the tap-in reimbursement; and an itemized list of the costs, including calculations for the prorated share cost proposed for each nonparticipating property. The final accounting will be subject to review for accuracy and completeness for approval by the Department of Utilities. Nonparticipating properties may be authorized to connect to the improvement prior to the submittal and acceptance of the final accounting by making a deposit of the estimated cost of the tap-in reimbursement with the LCDU. When the final accounting has been accepted and the actual cost of the tap-in reimbursement is known, the nonparticipant will either receive a refund or be required to pay the difference of the deposit and the actual prorated share. No payment from any nonparticipant will be disbursed to the individual, organization or agent constructing the improvement until the final accounting has been submitted to and approved by the Lake County Department of Utilities.

The entity constructing the improvement shall submit the final accounting with the calculations of the prorated shares to the LCDU within six months of written acceptance of the improvement project by the LCDU. Should the entity constructing the improvement fail to submit the final accounting within the required six-month period, the Lake County Board of Commissioners shall use all approved actual

cost information submitted to that point to calculate the tap-in reimbursement amount for the improvement and prorated share cost for each nonparticipating property.

1.04. BONDING AND INSURANCES

The Developer or Owner shall provide bonds and insurances in accordance with City, County, State and Federal Codes and Ordinances. Provide full name, address and telephone number of Contact person involved and same for the bonding company and/or insurance company. All bonding companies shall be listed on the latest edition of the Federal Treasury Circular #570.

1.05. SEWER/WATER CONTRACTOR LICENSING

The qualifications required for a Sewer/Water Contractor, regulations pertaining to permits, inspection, and specification are as follows:

A. An applicant for a Sewer/Water Contractor's License shall be a competent reputable person or firm incorporated in the State of Ohio regularly engaged in constructing sanitary sewers or waterlines and have been so engaged for a minimum two-year period prior to the time for his application.

B. The Sewer/Water Contractor shall annually submit a written application which shall contain a list of the Villages, Cities, Townships, etc. in which they have worked during the past two years; individual references within those areas such as engineers, inspectors, service directors, etc. who are personally familiar with their workmanship and character; business references; equipment they own; their excavator, if they do not own excavating equipment and a list of their "normal employees, especially the foremen who will be in charge of work performed under their license. All licenses expire on December 31st of each year. Blank application forms are available from the LCDU; see Exhibit L for a sample form. They shall also pay the current license fee as established by the Commissioners.

C. They shall submit with their application a bond in the amount of $10,000.00 to the benefit of the Commissioners on a form to be supplied by the LCDU and made by a surety licensed to do business in the State of Ohio.

D. They shall submit with their application, proof that they have public liability, property damage and automobile insurance covering any and all claims for damages for personal injury, including accidental death, as well as from claims from property damages which may arise from their operation or from those of their subcontractors as a Sewer/Water Contractor licensed by the Commissioners. The amount of such insurance shall not be less than $500,000.00 for injuries including accidental death to any one person and be subject to the same limit for each person; in an amount not less $500,000.00 in one accident and property damage insurance with limits of $100,000.00 and $100,000.00.

E. The policy or policies shall contain the following special provisions: The insurer agrees that ten (10) days prior to the cancellation of and/or reduction of the insurance afforded by this policy with respect to work done as a Sewer/Water Contractor, licensed by the Commissioners, written notice of such cancellation or reduction will be mailed to the LCDU.

F. The applicant's insurance shall also include insurance coverage known as Underground in the amounts specified above for the normal Public Liability, Property Damage and Automobile Insurance. Neither Collapse nor Explosion is required.

G. The Commissioners will reserve the right to require Explosion, Collapse and Underground (XCU) coverage, by the project, at the discretion of the LCDU, as it deems necessary.

H. The application fee will be in accordance with the current rate resolution established by the Commissioners. See Section 7 – Fees. A licensed Sewer/Water Contractor is expected to protect property owners by providing proper affidavits to the property owner that all labor and material costs incurred doing the Owner's work have been paid prior to receiving payment from the Owner. Failures in this regard will be considered during licensing review by the County. An affidavit, affirming that all labor and material costs incurred by the Sewer/Water Contractor during the preceding year have been paid, shall be submitted annually by the Sewer/Water Contractor with his application for a license.

I. The Sewer/Water Contractor is expected to exercise close supervision over the work being performed under his/her license. If the Sewer/Water Contractor is not able to be present, he/she must have a thoroughly competent and capable foreman in charge of the work. If the Sewer/Water Contractor wishes to maintain various crews he/she must select competent foremen who must be named in his/her application for a license. In all instances when the licensee wishes to subcontract with the permission of the LCDU, his/her subcontractor or foreman shall also be licensed.

J. Contractor shall pay past due inspection fees prior to all annual license renewal.

1.06. STANDARD NOTES FOR DRAWINGS

For construction plans in the absence of detailed project specifications, the following list of notes shall be included on the plans. If detailed specifications are provided, the information shall be included therein or on the plans at Design Engineer's preference or as directed by the LCDU.

1.07. SUBSTITUTES AND "OR-EQUALS"

A. General – Whenever an item of material or equipment is specified or described in the Contract Documents by using the name of a proprietary item or the name of a particular supplier, the specification or description is intended to establish the type, function, appearance, operation, service life, and quality required. When the specification or description contains or is followed by the words "or as approved", other items of material or equipment or material or equipment of other Suppliers may be submitted to the LCDU for review under the circumstances subsequently described. See Exhibit E for application form.

The LCDU will be allowed a reasonable time within which to evaluate each proposal or submittal made pursuant to this Item. The LCDU will be the sole judge of acceptability. No "or-equal" materials and equipment or substitute procedures will be ordered, installed or utilized until the LCDU's review is complete, which will be evidenced by either a Change Order for a substitute construction method or procedure or an approved Shop Drawing for an "or equal" material or equipment. The LCDU will advise Contractor in writing of any negative determination.

The LCDU may require Contractor to furnish at Contractor's expense a special performance guarantee, bond, or other surety with respect to any substitute for a length of time as determined by the LCDU.

The LCDU will record time spent by the LCDU and the LCDU's Consultants in evaluating substitute or "or equal" items proposed or submitted by Contractor pursuant to this Item and in making changes in the Contract Documents (or in the provisions of any other direct contract with the LCDU for work on the Project) occasioned thereby. Whether or not the LCDU approves a substitute or "or equal" item so proposed or submitted by Contractor, Contractor shall reimburse the LCDU for the charges of the LCDU and the LCDU's Consultants for evaluating each such proposed substitute or "or equal".

Contractor shall provide all data in support of any proposed substitute or "or-equal" at Contractor's expense including any additional data requested by the LCDU, and in an expeditious manner to allow timely performance of the evaluation by the LCDU.

B. "Or-Equal" Items - If, in the LCDU's sole discretion, an item of material or equipment proposed by Contractor in a written application is functionally equal to that named and sufficiently similar so that no change in related work will be required, as determined from information submitted by Contractor, it may be considered by the LCDU as an "or-equal" item, in which case review and approval of the proposed item may, in the LCDU's sole discretion, be accomplished without compliance with some or all of the requirements for approval of proposed substitute items. For the purposes of this Item, a proposed item of material or equipment will be considered functionally equal to an item so named if:

1. In the exercise of reasonable judgment the LCDU determines that: (i) it is at least equal in quality, service life, durability, dependability, appearance, operation, strength, and design characteristics; (ii) it will reliably perform at least equally well the function imposed by the design concept of the completed Project as a functioning whole, and;
2. Contractor certifies that: (i) there is no increase in cost or a credit due to the LCDU; and (ii) it will conform substantially, even with deviations, to the detailed requirements of the item named in the Contract Documents.
3. An "Or Equal" may not be approved if in the LCDU's judgment the spare parts, etc. are not compatible with existing LCDU's inventory, or equipment would require stocking additional spare parts not compatible with existing equipment.

C. Substitute Items - If in the LCDU's sole discretion an item of material or equipment proposed by Contractor does not qualify as an "or-equal" item under Paragraph 1.07.B, it will be considered a proposed substitute item.

Contractor shall submit sufficient information as provided below to allow the LCDU to determine that the item of material or equipment proposed is essentially equivalent to that named and an acceptable substitute therefore. Requests for review of proposed substitute items of material or equipment will not be accepted by the LCDU from anyone other than the Contractor.

The procedure for review by the LCDU will be as set forth below and as the LCDU may decide is appropriate under the circumstances.

Contractor shall first make written application to the LCDU for review of a proposed substitute item of material or equipment that Contractor seeks to furnish or use. The application shall certify that the proposed substitute item will perform adequately the functions and achieve the results called for by the general design, be similar in substance to that specified, and be suited to the same use as that specified. The application will state the extent, if any, to which the use of the proposed substitute item will prejudice Contractor's achievement of Substantial Completion on time, whether or not use of the proposed substitute item in the work will require a change in any of the Contract Documents (or in the provisions of any other direct contract with Owner or the LCDU for work on the Project) to adapt the design to the proposed substitute item and whether or not incorporation or use of the proposed substitute item in connection with the work is subject to payment of any license fee or royalty. All variations of the proposed substitute item from that specified will be identified in the application, and available engineering, sales, maintenance, repair, and replacement services will be indicated. The application will also contain an itemized estimate of all costs or credits that will result directly or indirectly from use of such substitute item, including costs of redesign and claims of other contractors affected by any resulting change, all of which will be considered by the LCDU in evaluating the proposed substitute item. The LCDU may require Contractor to furnish additional data about the proposed substitute item. Substitutions will not be accepted if they are only shown or implied on Shop Drawings. See Exhibit F for application form.

D. Substitute Construction Methods Or Procedures - If a specific means, method, technique, sequence, or procedure of construction is shown or indicated in and expressly required by the Contract Documents, Contractor may furnish or utilize a substitute means, method, technique, sequence, or procedure of construction approved by the LCDU. Contractor shall submit sufficient information in writing to allow the LCDU, in the LCDU's sole discretion, to determine that the substitute proposed is equivalent to that expressly called for by the Contract Documents. The procedure for review by the LCDU will be similar to that provided above. The use of an approved substitute means, method, technique, sequence or procedure of construction does not relieve the Contractor of his responsibility to provide an acceptable work product or his liability for all construction practices and procedures in the performance of the work.

1.08. CHARGE FOR COPIES OF RULES AND REGULATIONS

There shall be a charge as set by the Commissioners to cover printing for copies of LCDU Rules and Regulations and for Detailed Specifications. See Section 7 – Fees.

1.09. PLAN SUBMISSION AND REVIEW

When notified by the Lake County Treasurer that a property owner is in arrears on property taxes the review of plans, approval of plans and the providing of any LCDU services shall only occur after the Lake County Treasurer states the amount is paid in full or a payment plan has been approved by the Lake County Treasurer.

In order to expedite the processing of plans for proposed utility improvements within communities served by the LCDU the following regulations shall apply:

A. Two sets of preliminary site improvement plans along with two copies of the proposed dedication plat shall be submitted with an attached transmittal identifying the

contents for review and corrections. An evaluation of the water distribution and treatment facilities and/or the sanitary collection and treatment system will be made by LCDU to determine if service is available for the proposed project.

B. One set of marked preliminary site improvement plans will be returned to the consulting engineer for his use in preparing final plans. Submit two (2) sets and additional sets as needed by the Contractor/Engineer for approval.

C. Provide one (1) set of building plans, approved by the County Building Department or the local municipal building department, if for single parcel.

D. Prints to be 24" x 36" in size and must show water main and sewer in plan and profile.

E. Use a scale graduation of 1"=40' for horizontal; and 1" = 5' for vertical. Use 1"=20' for horizontal where more than three (3) utilities are involved.

F. Streets or easements must have stationing noted along water main or sewer line alignments, including fittings and appurtenances.

G. Include all easement documentation, on County form, with submittal. A minimum ten (10) foot wide exclusive easement is required for any service connection crossing a parcel different from the one being served. Easements for public sanitary sewer and water mains shall be a minimum of twenty (20) feet wide.

H. Title legend should contain name of street or easement, name of consultant, name of city, village or township, scale and date of preparation. If more than one sheet, sheets should be numbered consecutively and each sheet must contain definite match lines. Drawing reference must be included with description on title sheet.

I. Provide space on the original title sheet for Municipality and Lake County signatures. A standard format will be available at the LCDU office.

J. Include all appropriate County standard details.

K. Show and label all existing utilities.

L. Label proposed lines: length, size, grade material and class.

M. Lot lines should be shown on drawings with frontage dimensions given. Parcel numbers should be shown for all parcels. Addresses for all existing structures should be provided.

N. Proposed and existing connections should be noted on drawings with connections involved in the project designated with tee station, offset station, length and elevation.

O. All plan sheets should be provided with a North directional arrow.

1.10. APPROVAL OF PLANS

A. Plans for proposed sanitary sewerage and water supply improvements which are proposed for construction in Lake County, Ohio, outside of any municipal corporation, inside of any municipality with the municipality's consent to the County's acting on behalf of the municipality, or within or connecting to or proposed to connect to any County operated sewer district or water system, shall be

prepared by a Professional Engineer licensed to practice in the State of Ohio, who is experienced in such work and shall be submitted to the LCDU for approval. Said plans shall then be submitted to the Commissioners, to the Ohio EPA and to other agencies and authorities and be approved prior to the installation of the improvement. Plans for the following classes of improvements must be submitted for approval, whether proposed for construction within or without any County Sewer district previously established by the Commissioners.

1. Class A – Proposed public sanitary sewerage or water supply including treatment plants, sanitary sewage conveyance systems and water distribution systems and any change in existing structures or methods of treatment for unincorporated communities, or other lands outside of municipal corporations or connecting with any County system. A public sanitary sewerage or water supply system shall be construed to mean a system serving two or more parcels, except for that sanitary sewerage or water supply which is constructed on public lands, in public highways, dedicated roadways, streets or alleys, or in easements which serve less than three dwellings or buildings, but which may, in the opinion of the LCDU, be made to serve additional dwellings or buildings, existing or proposed, along its line, or which may be extended to serve additional dwellings or buildings.

2. Class B – Proposed sanitary sewerage or water supply including treatment or supply facilities of industrial or commercial non residential establishments which discharge their wastes into a sanitary sewerage system or receive their water supply from a water supply system operated and maintained by Lake County, Ohio, or which is under lease or franchise from said County.

For the purposes of these regulations, an industrial establishment shall be one engaged in the manufacture of a product, and a commercial non residential establishment shall be one that is engaged in selling goods or services to either a public or a private clientele.

B. Proposed sanitary sewerage or water supply improvements of the classifications described in Paragraph 1.10.A may be constructed in County outside of any municipal corporation or inside of any municipality with the municipality's consent to the County's acting on behalf of the municipality subject to the following regulations:

1. Case 1 – Within an established sewer district on undedicated thoroughfares or private rights-of-way.

If the improvement is proposed for construction on an undedicated thoroughfare or private right-of-way, and it is to be operated by the Commissioners, the Owner shall agree to dedicate the thoroughfare or furnish a right-of-way deed for the private right-of-way. For this purpose he shall furnish to the County, before he shall be given a permit for the construction work, a bond, acceptable to the Commissioners, in an amount fixed by said Commissioners, but not less than one thousand dollars ($1,000.00) to insure the dedication of such thoroughfare or the furnishing of such right-of-way deed, within a time prescribed by the Commissioners, and free and clear of all encumbrances, and also to insure the grading, draining, and other improvements as prescribed by these or other Rules and Regulations of the Commissioners. Such improvements shall be designed by and the construction of such improvements shall be under the general

supervision of a Professional Engineer licensed in the State of Ohio, experienced in the design and construction of water supply and sanitary sewerage facilities.

2. Case 2 – Within a sewer district on a dedicated thoroughfare.

If the improvement is proposed for construction within an established County sewer district, on a dedicated and accepted thoroughfare or right-of-way, the improvements shall be designed by and the construction of such improvements shall be under the supervision of a Professional Engineer, registered in the State of Ohio, and experienced in the design and construction of sanitary sewerage or water supply facilities, and constructed under the provisions of the Commissioners, and County Sewer District Law and County Water Supply System Law (Section 6103.01 et seq. and 6117.01 et seq. of the Ohio Revised Code.)

3. Case 3. – Within an established sewer district on existing undedicated thoroughfares or private rights-of way where the properties fronting the project are fee simple lots and the thoroughfares or private rights-of way will remain undedicated.

If the improvement is proposed for construction on an undedicated thoroughfare or private right-of-way; and the properties fronting the project are fee simple lots individually owned; and the property owners wish the thoroughfare or private right-of way to remain undedicated, the improvement will <u>not</u> be owned or operated by the Commissioners. The property owners shall agree to form a Homeowners Association. A maintenance fund shall be established and administered by the association for the sole purpose of the facilities repair and maintenance, in accordance with Section 2.00 R and 3.00 H of these Rules and Regulations. A mechanism to replenish the maintenance fund when funds are used for repairs and maintenance shall be established. No reduction in the maintenance fund shall be made nor shall this reserve fund provision be amended or removed from the Homeowners Association By-Laws, without the consent of the LCDU. Maintenance of the facility shall be the responsibility of the homeowners association. The improvement shall be constructed in common area granted by the individual property owners to the Homeowners Association. The improvement shall be constructed to Lake County Department of Utilities standards and all rules regarding the facility's installation shall apply. If the improvement is for a waterline, each service will have an individual meter from the main line. Such improvements shall be designed by and the construction of such improvements shall be under the general supervision of a Professional Engineer licensed in the State of Ohio, experienced in the design and construction of water supply and sanitary sewerage facilities.

C. Two copies of satisfactory detailed plans and specifications and estimates of cost and three copies of the detailed shop drawings, catalog data, pump performance curves, etc. for all improvements provided for under Paragraphs 1.10.A and 1.10.B shall be submitted to the LCDU, and shall be accompanied by (i) a report prepared by the design engineer, giving all pertinent data regarding the project, and (ii) a communication addressed to the Commissioners referring to the plan and specifications and requesting their approval of the same. Such a communication shall be signed by the Owner. Plans shall be 24"x36" format and be signed and sealed by a Professional Engineer.

D. Any plans and specifications that are improperly prepared or accompanied by insufficient or inaccurate information may be rejected by the LCDU, whereupon revised plans and specifications or more sufficient data shall be submitted, as required. Construction of the improvement will not be authorized until satisfactory engineering plans and data have been submitted to and approved by all of the approving authorities.

E. The submission to and approval of plans and specifications for sanitary sewerage improvements and water supply improvements by the Commissioners will not relieve the Owner from requirements of the Ohio EPA with reference to the approval of plans and specifications for certain improvements.

F. The authorization to construct any sanitary sewerage or water supply improvements shall be by a letter issued to the Owner from the LCDU stating that permission to commence construction has been granted. Such a letter shall not be sent until the approvals of the Commissioners and, where necessary, the Ohio EPA have been secured in writing (i.e. permit to install).

G. All Bonds submitted to the Commissioners must be submitted by a Bonding Company licensed to do business in the State of Ohio and in good standing with Lake County.

H. Plan approval shall expire if construction has not been initiated by a developer or the property owner within (12) months of the effective approval date as shown on the originally submitted for approval project plan copy. (This is not to be construed as the date that is shown on the original title sheet, where one is required.) Projects that are not initiated or do not show continuing progress towards completion during the (12) twelve months following approval, shall require a plan resubmittal to determine compliance with any revisions to the most current LCDU Rules and Regulations.

1.11. GENERAL CONSTRUCTION, DESIGN REQUIREMENTS AND SPECIFICATIONS OF SANITARY SEWERAGE AND WATER SUPPLY IMPROVEMENTS

A. No sanitary sewerage or water supply construction included under the classifications of Items 1.02 and 1.03, shall be started until the plans have been approved by all authorities, having jurisdiction over the construction. LCDU, the Commissioners, and where necessary, the Ohio EPA, and authorization has been granted by the LCDU, as herein provided. The installation shall be in strict accordance with such approved detailed plans, specifications, and shop drawings, etc. Construction of sanitary sewerage or water supply facilities to be operated by the County shall not proceed until detailed shop drawings have been submitted in triplicate and approved by the LCDU.

B. If any change or modification is deemed necessary or desirable by the public officials or persons, firm or corporation having authority of work, previous to or during the construction, such change or modification shall be incorporated in revised plans, which shall be submitted for approval in the same manner as required for original plans.

C. Before receiving a permit for any work requiring excavation in any street, highway or road right-of-way, the person desiring to make such excavation shall obtain from the proper authority, the required permit for such work, and shall agree to comply with all requirements of the authority issuing such

"road opening permit". If no "road opening permit" is required by the authority having jurisdiction over a particular street or highway, a written statement to that effect must be obtained from the authority.

D. The material and workmanship must conform in all respects to the requirements of the specifications of the LCDU whose specifications shall be considered as minimum specifications, and if built by contract, the contract shall contain this stipulation.

E. All improvements shall be constructed under the direct supervision of a LCDU duly authorized representative, and all expenses to be incurred in connection with such supervision shall be paid to the LCDU by the contractor. The amount to be paid to the County for such purposes shall be deposited with the LCDU prior to the authorization for the construction work to commence. If the cost of such supervision exceeds such deposits, the Owner shall pay the difference to the LCDU. If a balance is left, it shall be refunded to the Owner without interest. The cost of such supervision shall be based on the actual itemized costs as approved by the Commissioners.

F. No construction work in connection with the improvement shall be done except in the presence of an inspector authorized by the LCDU. Forty-eight hours of notice of the intention to begin work shall be given to the LCDU to enable the Department to arrange to place one or more, if needed, inspectors on the work. The Owner's Engineer shall also act as Resident Engineer for the improvement.

G. If the LCDU has proof or evidence in writing that any such work is being improperly done, it may order all work stopped and the Owner or his contractor shall thereupon stop and shall not resume until authorized in writing by the LCDU to do so.

H. Tee-branches, manholes and other sanitary sewer appurtenances, valves, hydrants and other water main appurtenances shall be placed where required by the LCDU.

I. At the completion of work, a set of "as-built" plans on mylar shall be furnished by the Owner's Engineer showing the exact location and depth of all sanitary sewers, water mains and appurtenances thereto.

J. No provision in this article shall be so construed as to relieve the Owner from the responsibility to furnish all private engineering, surveying and inspection services necessary in connection with the improvements.

K. The County expressly disclaims any responsibility for the accuracy or completeness of information given on drawings, orally or in writing by any of its employees in regard to existing structures. The contractor shall have no claim against the County on the account of such information given.

L. In excavating and backfilling trenches, and constructing sanitary sewerage and water supply facilities, care must be taken not to move or injure any structures or water courses, whether above, at or below the surface of the ground. If necessary, the contractor or the Sewer/Water Contractor in the case of house water and sewer service connections, shall, at his own expense sling, shore up, and secure and maintain in operating condition any such structure or watercourse. If damaged, he shall repair any such damage, and shall maintain them in good repair until the final acceptance of the job.

M. Approval of the quality of all materials and workmanship by the LCDU shall be required. The LCDU may require testing of equipment or materials at the place of manufacture by an independent testing laboratory, or by others, at no expense to the County.

N. General minimum specifications applying to sanitary sewer lines, other than service (house) connections, are discussed in Section 3 of these Rules and Regulations.

O. All Sanitary sewer construction shall be in accordance with the Specifications of the LCDU. These specifications shall be considered as minimum; and shall be performed by a Sewer/Water Contractor licensed by the Commissioners.

P. General minimum specifications applying to water are discussed in Section 2 of these Rules and Regulations.

Q. All water main construction shall be in accordance with the Specifications of the LCDU, These Specifications shall be considered as minimum, and shall also be in accordance with the requirements of the water supplier, franchised by the County to operate in the area in which the improvement will be constructed.

R. All water mains and main sanitary sewers shall be extended along dedicated road rights-of-way to the limits of the property being served by those utilities regardless of whether or not the properties being served front on the road right-of-way. If the property is separated from the right-of-way by a strip of land so narrow that, in the opinion of the LCDU, it is not buildable or developable, the sewer or waterline will be extended to the limits of the property being served, just as if it did front on the road right-of-way. It may be required that water mains and main sanitary sewers that are located within easements, also be extended to the limits of the property being served by those utilities. Use of ransom strip to supersede this requirement shall not be allowed. When the LCDU determines that extending the waterline or sanitary sewer to the limits of the property being served poses a hardship on the individual, organization, or agency of private enterprise building the improvement; or if the LCDU determines that there are no additional properties that could be served through an extension of the improvement to the limits of the property being served, either at the time the improvement is constructed or in the future, the LCDU may issue a variance to this rule wherein extension of the improvement to the limits of the property served is not required. However, in consideration for the grant of such a variance, the individual, organization, or agency constructing the improvement shall sign an agreement, prepared by the LCDU, requiring participation in the cost of extending the improvement to the limits of the property served if the extension is required in the future.

S. Water mains and main sanitary sewers are to be constructed on opposite sides of traveled ways or pavements within easements and dedicated roads right-of-ways. In instances where this is a physical impossibility, a minimum of 10 feet horizontally shall be maintained between water mains and main sanitary sewers.

T. Under all circumstances and conditions the most current Lake County-approved General Master Sanitary Sewer Plans shall be followed. Therefore, wherever possible, gravity sanitary sewer service shall be provided to any and all parcels and shall include all portions of said parcel to a depth

of thirty (30) feet. In instances where gravity sanitary sewer service is impossible within the thirty (30)-foot depth, a pump shall be considered an option.

1.12. SHOP DRAWINGS

In order that the LCDU may determine conformance with information given in the Drawings and Specifications and compatibility with the design concept of the computed project as a functioning whole as indicated by the Drawings and Specifications, the Contractor shall prepare and submit to the LCDU detail drawings of apparatus and materials for each product, material, etc., to be used with a project.

Shop Drawing requirements are included below. The LCDU's review of any shop drawing shall not release the Contractor from responsibility for deviations from the Drawings and Specifications and the function and quality of the project.

For the shop drawings required by the LCDU, all shop drawings shall be checked, approved and certified in writing by the Contractor and the Owner's registered engineer as being in conformance with the requirements of these Standards by initialing, dating and indicating each item number before being forwarded to the LCDU.

Sufficient shop drawings shall be submitted in the form of pdf or hard copy, along with the shop drawings submittal form (Exhibit R) to the LCDU. Drawings will be reviewed and returned by the LCDU with appropriate comments. Neither fabrication, shipment nor installation shall begin until such drawings have been returned (with review stamp affixed) by the LCDU. If the Contractor installs any piping, reinforcing steel, electrical work, machinery, apparatus or material or product prior to the returning of the shop drawings (with review stamp affixed) by the LCDU, the Contractor shall be required to remove at no cost to the LCDU, all or any part of the items which are not satisfactory, or not opened for inspection.

When submitting shop drawings to the LCDU, the quantity of drawings submitted and the descriptions of the items for which the shop drawings are being submitted shall be indicated on the Contractor's transmittal. Shop drawing submittals in the form of hard copies, such as piping layouts, steel reinforcing, structural steel, miscellaneous metals, electrical layouts, etc., at the Contractor's option, may include two copies - one hardcopy and one reproducible. The reproducible will be returned with the LCDU's comments noted. The use of reproducibles will eliminate errors in transferring comments from copy to copy and is encouraged whenever possible.

Layout drawings for electrical work shall show locations and sizes of conduit runs, pull and junction boxes, outlets, lighting fixtures, panelboards, switches, motor controls, disconnects, etc., and will be used by the LCDU to verify the location and size of conduit, wire and equipment. Conduit layout drawings shall be submitted early. No work shall proceed until such drawings have been returned (with review stamp affixed) by the LCDU.

Shop drawings regarding pumps, blowers, etc., shall include all information on electrical components and characteristics, appropriate curve data at various operating and efficiency levels, manufacturer's motor data sheets, hardware and accessories. Shop drawings will not be reviewed and returned until all such information is received.

1.13. RECORD DRAWINGS (“AS-BUILTS”)

The Contractor for public and private projects shall keep one record copy of the LCDU-approved plans, including all specifications, drawings, Ohio EPA approved letter, addenda, change orders and shop drawings (record documents) at the project site in an approved location. The record documents shall be kept current, and shall be available to the LCDU for inspection at all times. Record documents shall be properly labeled, and kept in a clean, dry and legible condition, with the Contractor to provide files and racks for storage, and shall not be used for construction purposes.

The record drawings shall be annotated by the Contractor to show all changes made during construction in accordance with the requirements below. Prior to substantial completion, and/or final payment and acceptance by the LCDU, and prior to customers being tied into utilities, the Contractor for the project shall deliver the record drawings to the LCDU with certification that the record drawings, as submitted, show all changes made during construction.

Record drawings shall be completed and submitted to the LCDU in PDF format and one (1) paper hard copy. All field information shall be created utilizing State Plane Coordinates.

For the record drawings required by the LCDU, the annotating of drawings for changes made during construction shall include those as indicated in the record drawings contents list included at the end of this Section as Exhibit G (Pages G1-G3).

The required certification shall be by an Affidavit for Record Drawings as similarly included (Page G-4). Record Drawings shall be prepared under the direct supervision of a registered surveyor and registered engineer and sealed by the registered surveyor and registered engineer.

1.14. PRECONSTRUCTION CONFERENCE

Prior to construction beginning on a project, a preconstruction conference shall be held to discuss construction activities and concerns. A minimum of 48 hours prior to the preconstruction conference being held, all submittals required by these Rules and Regulations and other City, County, State and Federal laws shall have been submitted and approved by the LCDU. Submittals include, but are not limited to, the plans, specifications, shop drawings, preconstruction videos, easements, payment of fees, permits and escrows, etc. The LCDU, Owner, Prime Contractor, major subcontractors and affected utilities shall be present. Scheduling of this meeting shall take place a minimum of 48 hours after submission of a minimum of three sets of approved construction drawings.

1.15. PRECONSTRUCTION VIDEORECORDING

Prior to mobilizing equipment or delivering materials to a project site, all construction projects that front public property or are within existing or proposed rights-of-way, the condition of the project site shall be video recorded. Video recording shall extend from right-of-way to right-of-way and twenty feet onto private property along the route of construction. In easement areas, video recording shall extend twenty feet each side outside of the easement as well as the full easement area. Video recording shall include both audio and video, and the existing conditions documented, specifically for restoration concerns. Video recording shall be submitted and accepted by the LCDU a minimum of two weeks prior to construction.

Identify house and business addresses or otherwise provide a means of measurement so that the location of recording could be easily determined. Video recording shall be a DVD in MPEG format as directed by the LCDU. Construction shall not begin until the LCDU has reviewed and approved the preconstruction video recording.

1.16. MONUMENTS / PROPERTY PINS

The Contractor shall, prior to actual construction, erect protective barricades around all visible survey monuments that are in or adjacent to the construction area and as noted on the drawings. Any other monument or property corner stake, pin or marker discovered or uncovered during progress of the work shall be protected from damage or loss and the LCDU shall be notified in writing as to the exact location.

Any survey monument, property corner, property pin, right-of-way or other marker damaged or destroyed by the Contractor's forces shall be replaced by a licensed surveyor, employed by and at the expense of the Contractor. The Contractor shall provide the Owner and the LCDU certification by the registered surveyor as to the replacement of the marker.

1.17. REPLACEMENT OF EXISTING INFRASTRUCTURE

Any pavements, driveways, parking areas, curbs, gutters, berm stone, sidewalks, water lines, gas lines, sewers, catch basins, headwalls, drains, field tile, conduit pipes, cables, fences, landscaping, or other existing facilities that are removed or otherwise disturbed in carrying out a project, shall be replaced in "as good as" or "better" condition as originally found at the expense of the Contractor and to the approval of the LCDU per these Standards as a minimum. Any such material or product broken, damaged, or disturbed to such an extent as to require replacement, shall be replaced with new material or product at the expense of the Contractor or Developer (if it is a private project).

Work, materials and products shall be in accordance with all applicable requirements of these Rules and Regulations and, where not included herein, the requirements of all applicable ODOT Items as approved by the LCDU.

In any event, the Contractor shall be liable for any damage or disturbance to public or private property caused by movement of equipment or by other operations. The contractor shall repair or replace, to the condition existent prior to his operations any public or private property damaged or disturbed by his operations. If it is not possible to repair to preexisting condition, then the items shall be replaced per these Rules and Regulations at no expense to the LCDU.

1.18. TEMPORARY ENVIRONMENTAL CONTROLS

The Contractor shall provide and maintain methods, equipment, and temporary construction as necessary to provide controls over environmental conditions along the route or in the area or site of construction and related areas under the Contractor's control, and remove physical evidence of such temporary controls upon completion of work. All such temporary controls shall be in accordance with applicable Federal, State, County and local laws, Rules and Regulations governing noise, dust, water quality, pollution and erosion and sediment control, and the requirements of these Standards. In the event of conflict between the requirements of these Standards and Federal, State, County and local laws rules and regulations, the more stringent shall apply.

Temporary environmental controls, as applicable to soil erosion and sediment control, shall be in accordance with ODOT Item 207 and as required by Lake County Soil and Water Conservation District (SWCD). Where heavy construction equipment is no longer needed, the Contractor shall either final grade and seed or temporary seed to prevent soil erosion. No area where construction is complete shall sit for longer than 30 days without being seeded or as required by the Ohio Rainwater and Land Development Handbook, latest edition. Silt barriers shall stay in place until grass has grown so soil will not erode. Any findings and corrections required per the review and on-site inspection by Lake County SWCD shall be mitigated by the Contractor.

Particular attention shall be given to dust, mud and dirt control in the streets, sidewalks and drives within the limits of the project and any haul roads leading to or away from the project that are used by the Contractor, his subcontractors and his material suppliers. The LCDU reserves the right to mandate street clean up for dirt, dust and mud control in the interest of public health and safety, either daily, weekly or hourly depending on the circumstances surrounding the condition of the street, sidewalk and drives.

The following methods of control shall be used:

1. The streets and haul roads shall be swept by an automatic self-contained mechanical sweeper with integral water spray and vacuum equipment. All work shall be in accordance and compliance with the local noise ordinance.
2. All excessive dirt that gets on the pavement shall be removed by means of hand shoveling or appropriate mechanical equipment and the area swept as in method (1) above.
3. Sidewalks and driveways shall be cleaned by means of shovels and hand brooms or approved mechanical equipment.
4. If authorized or directed by the Owner or the LCDU, any dust remaining shall be controlled in accordance with ODOT Item 616, including the use of calcium chloride as permitted by the LCDU.

The Contractor shall comply with the above requirements on a daily basis. If the Contractor fails to perform the above work in a satisfactory manner, all work, except cleanup operations will be stopped immediately, at no additional cost to the LCDU, until the Contractor has complied with the above requirements to the satisfaction of the Owner and the LCDU.

1.19. MAINTENANCE OF FLOW AND DRAINAGE

During construction, where existing sewers, ditches or other drainage ways are encountered and are interfered with, flow shall be maintained in the existing sewers, ditches or other drainage ways. Sewage or other liquid must be handled by the Contractor either by connection into other sewers, with the approval of the LCDU; by providing temporary conduit to maintain flow through the trench or other excavation; or by temporarily pumping to a satisfactory outlet; and shall not be pumped, bailed or flumed over the street or ground surface. Existing field tile drains shall be free to drain at all times. The Contractor shall be available

24 hours a day, 7 days a week to immediately correct or free any sewer, ditch or drainage way that becomes clogged or stopped due to the work the Contractor is undertaking.

The Contractor shall be responsible for maintaining drainage in new and existing structures as required to protect his work, and shall be responsible for maintaining drainage on the project site where his construction operations alter the existing conditions. Failure to comply or to act when called to remedy a drainage issue may require the LCDU to act on the issue and charge the Contractor for the cost to make the correction.

1.20. REMOVAL, REPAIR, AND TUNNELING OF TREES, SHRUBS, BUSHES AND OTHER LANDSCAPING ITEMS

Trees, shrubs, bushes, and other landscaping items which are in the immediate vicinity of the route of construction and the complete destruction of which cannot be prevented, despite extreme care on the part of the Contractor, shall be removed, stored (if possible) and reset or removed and disposed of by the Contractor, if not previously removed by the Owner. The LCDU shall be consulted and permission shall be obtained prior to the removal of any trees, shrubs, bushes and other landscaping items not labeled to be removed. The Contractor shall consult the LCDU well in advance of pipe laying or other construction activity concerning such removals. Trees to be removed shall be felled so as not to injure trees or structures that remain or other construction activity. Removal shall include the removal of stumps and roots to a minimum of 12 inches below grade.

An exception to the above shall be made for trees noted on the drawings to be tunneled. Tunneling will be required if excavation occurs within that area encircled by drawing a circle having a diameter in feet equal to the tree diameter in inches about the center of the tree. Contractor shall determine appropriate manner for tunneling at no additional cost to the LCDU.

Other trees, tree limbs, shrubs, and bushes that are so located that equipment of the Contractor will damage same during construction, shall be carefully trimmed and shaped, as approved by the LCDU, by workmen skilled in tree trimming. All limbs and branches shall be flush cut. Trees and bushes, other than those whose removal is approved by the LCDU, which are destroyed or damaged to the extent that their continued life is impaired shall be replaced by the Contractor at his expense and to the satisfaction of the Owner and the LCDU.

Prior to Final Payment, the contractor shall contract with a certified Arborist to have the Arborist inspect all trees, shrubs and bushes along the line of the work and to have the Arborist supervise the operation to properly trim, prune, repair and protect any that have been damaged, and to designate those which have been so damaged as to require replacement.

1.21. DEWATERING REQUIREMENTS FOR TRENCHES AND OTHER EXCAVATIONS

Any person installing any well, well point, pit or other device used for the purpose of removing ground water from an aquifer shall complete and file a Well Log and Drilling Report form with the Ohio Department of Natural Resources (ODNR) and LCDU, within 30 days of the well completion in accordance with the ORC 1521.01 and 1521.05 (or applicable sections within the ORC). In addition, any such facility that has a capacity to withdraw waters of the state in an amount greater than 100,000 gallons per day from

all sources shall be registered by the Owner with the Chief of the ODNR (or appropriate division), within three months after the facility is completed in accordance with Section 1521.16 of the ORC (or appropriate section within the ORC). For copies of the necessary well log, drilling report, or registration forms, please contact: Ohio Department of Natural Resources; Fountain Square; Columbus, Ohio 43224-1387; (614) 265-6717 (or appropriate address and telephone number should they change). Also, any well, well point, pit or other device installed for the purpose of lowering the ground water level to facilitate construction of a project shall be properly abandoned in accordance with the project plans or as directed by the ODNR.

Sewage or other liquid shall be handled by the Contractor either by connection into other sewers, with the approval of the LCDU; by providing temporary conduit to maintain flow through the trench or other excavation; or by temporarily pumping to a satisfactory outlet with the approval of the LCDU; and shall not be pumped, bailed or flumed over the street or ground surface. Any easement or right of way containing public infrastructure must maintain clear access for construction, improvements and maintenance. Item(s) located within the easement boundary shall be removed at the owners expense.

1.22. PROTECTION OF COUNTY WATER SUPPLY AND SANITARY SEWER SYSTEMS (Excerpts from the Ohio Revised Code)

A. ORC 6103.02 – The Board (Board of County Commissioners) may adopt, publish, administer, and enforce rules for the construction, maintenance, protection and use of county-owned or county-operated public water supply facilities outside municipal corporations and of public water supply facilities within municipal corporations that are owned or operated by the county or that are supplied with water from water supply from water supply facilities owned and operated by the county, including but not limited to, rules for the establishment and use of any connections.

B. ORC 6103.30 – No person shall tamper with or damage any water supply or water main constructed under Section 6103.02 to 6103.30, inclusive of the Revised Code or any apparatus or accessory connected therewith or pertaining thereto.

C. ORC 6117.01 – The Board may make, publish, and enforce Rules and Regulations for the construction, maintenance, protection, and use of sewers and sewer improvements in its County outside of municipal corporations, and of sewers and sewer improvements within municipal corporations in its County wherever such sewers are constructed or operated by such Board of discharge into sewers or sewage treatment plants constructed or operated by such a Board including the establishment and use of Connections.

D. ORC 6117.45 – No person shall tamper with or damage any sewer or sewage disposal plant constructed under Section 6117.01 to 6117.45, inclusive of the Revised Code, or any apparatus or accessory connected therewith or pertaining thereto, or make any connection into the sewer or sewage disposal plant without the permission of the Board or in a manner or for a use other than as prescribed by the Board. No person shall refuse to permit the inspection by the LCDU of any such connection.

1.23. PROTECTION OF WETLANDS

Improvements that may directly or indirectly affect wetlands shall be in conformance with the County's regulations and as approved by the U.S. Army Corps of Engineers and/or the Ohio Environmental

Protection Agency (Ohio EPA). If work is within 100 lineal feet from a wetlands area, Contractor shall use caution so as not to disturb wetlands. If the improvements will directly or indirectly affect the wetland area, the protections/construction methods below shall apply.

Specific areas along the project route may be shown or noted as wetlands areas on the drawings or as noted or shown within an approved wetland delineation. The Contractor shall properly protect wetlands areas by using care to avoid such areas. In all areas that the Contractor's work includes excavation in wetlands areas the work shall comply with all U.S. Army Corps of Engineers requirements but at a minimum the Contractor shall remove and stockpile the top 12 inches of topsoil. Said topsoil shall be replaced at wetlands areas prior to final grading. Final grading will include the restoration of wetlands areas to the original ground profile with no change in ground contours except as noted and approved on the plans or drawings. Existing seeds in wetlands areas will be worked into the surface of restored areas to enhance the restoration of wetlands' vegetation. Mulching material shall be provided at all disturbed wetlands areas and restored wetlands areas in accordance with mulching requirements in this Standard. Protection of wetlands areas shall include the following:

1. All unsuitable/excess dredged and excavated material not used as backfill over the pipeline shall be removed and disposed of at a separately approved, by the LCDU, upland disposal site.
2. Turbidity controls in the form of silt curtains or similar type cloth material shall be installed downstream from the project area and shall remain in place during all excavation and restoration operations, until the work has been approved by the LCDU.
3. The fill created by the discharge shall be properly maintained to prevent erosion and other non-point sources of pollution.
4. Exposed bank surfaces shall be mulched with approved erosion control matting until natural vegetation becomes re-established.

1.24. TESTING FOR COMPACTION IN TRENCHES

For compacted earth and granular backfill in trenches, the Contractor shall employ a testing laboratory to make tests on the site at no cost to the LCDU. For backfill in trenches the testing shall be as required for the infrastructure being installed, but at a minimum the testing shall occur at every lift (6" maximum) every 100' spacing along the trench, except for roadway crossings the spacing shall be every 10' or in each driving lane of the roadway. All substandard compaction shall be repaired/replaced by the Contractor at Contractor's expense.

1.25. REMOVAL OF EXCESS EXCAVATED MATERIALS

All excess excavated material that has been stockpiled at the work site, and which will not be used for backfill or other fill purposes, shall be removed from the project area within 48 hours of the excavation. In all cases, stockpiles of all excavated material and all construction materials shall be of limited size and shall be neatly maintained in such a manner that they will not block existing drainage or be hazardous to pedestrian or vehicular traffic in any way. The limitation relative to the stockpiling of all excavated material

and all construction materials shall be controlled by the Owner and the LCDU. In the event the Contractor fails to remove excess excavated material as required above, or fails to satisfactorily modify his operations relative to the stockpiling of excavated or construction material upon order of the Owner or the LCDU, all work except cleanup operations will be stopped, and remain stopped, until the order of the Owner or the LCDU has been complied with.

The removal and disposal of all surplus excavated material shall be the responsibility of the Contractor. The LCDU or Owner shall be provided with any surplus material desired, to be delivered at a location selected by the LCDU or Owner within County corporation limits. The LCDU or Owner shall require the selected location to be leveled or contoured by Contractor daily at no expense to the LCDU.

Silt barriers shall be placed within 24 hours around long term stockpiles of soil (unless temporary seeding is used) as well as along the down slope, or drainage course, and portions of staging sites. Long-term stockpiles shall be defined as stockpiles remaining after 48 hours of the excavation. Also, excavated materials and stored materials shall not be placed next to trees within that area encircled by drawing a circle having a diameter in feet equal to the tree diameter in inches about the center of the tree.

1.26. MANUFACTURER'S SERVICES

The equipment manufacturer for all equipment that will be owned and/or operated by the LCDU shall furnish a competent factory trained, certified, service representative who shall supervise or inspect the installation; test, align, adjust and calibrate the equipment as necessary; and instruct LCDU personnel in their operation and maintenance of the equipment. The LCDU shall have the right to audio/video record all sessions regarding equipment operation and maintenance instructions. Manufacturer's services shall be provided as required until the operation and understanding of the equipment is satisfactory to the LCDU at no additional cost to the LCDU.

Manufacturer's services shall be provided as required by the LCDU for more complex equipment installations such as electrical, HVAC, etc. other than piping installations.

The LCDU shall be notified a minimum of 72 hours prior to the scheduled time for the arrival of the service representatives on the project site. The manufacturer's service representative shall, prior to leaving the project site and for each visit, complete a manufacturer's service representative's report, as provided in Exhibit H.

1.27. INSPECTION BY THE LCDU

The LCDU shall employ competent resident project representatives to observe the construction of projects and check for conformance with these Standards and the drawings and specifications. This requirement applies to any project within the LCDU's District.

1.28. CLEANUP

At the conclusion of all work, the Contractor shall cleanup all rubbish and foreign materials and leave all areas of work in a condition at least as good as existed prior to construction activities, or as approved by the LCDU, ready for use.

1.29. SEEDING, RESTORATION AND LANDSCAPING

A. General Requirements – All proposed developments, regardless of their size, and improvement projects shall conform to the landscaping requirements as set forth in this article. These requirements shall apply to all street ROW's, pedestrian ways, drainage ways, green spaces, and all other unpaved areas.

Grass – All unpaved areas shall be planted with the appropriate grass mix and type as set forth in the plans and specifications for the project or development or at a minimum follow the guidelines set forth in ODOT item 659.

Landscaping – Landscaping shall consist of plant materials and mulching of the permitted plant varieties approved by the LCDU.

The specifications of this item are to be considered minimum requirements and are superseded by the requirements of the local authority with jurisdiction over the roadway, when applicable.

Pavement replacement in utility trenches on asphalt streets shall consist of a minimum of six inches of ODOT Item 301 asphalt concrete base, two inches of ODOT Item 402 asphalt concrete and 1 1/2" inch of ODOT Item 404 asphalt concrete. Asphalt concrete pavement shall be placed in accordance with the weather and temperature limitations of ODOT Item 401.05. A temporary 3 1/2" concrete cap with a visqueen separation layer shall be applied to the trench if the weather conditions do not permit asphalt placement. Once the weather conditions are sufficient for placement of asphalt, the temporary concrete cap shall be immediately removed and asphalt shall be placed.

Pavement replacement in utility trenches on concrete streets shall consist of a minimum of four inches of ODOT Item 304 limestone aggregate and seven inches of ODOT Item 451 with reinforcing fabric (6 x 6 x 10 gage wire mesh). For concrete pavements, if after all other preparation any remaining portion measures less than 5'-0" to the nearest joint, remove and replace same to the nearest joint. When thickness is greater than 6 inches, furnish and install 5/8-inch hook bolts at 20 inches center-to-center where new abuts existing.

The existing pavement shall be saw cut two feet wider than the width of the utility trench at the surface of the trench (one foot on each side of the trench). The thickness and depth of the concrete base and asphalt surface shall be adjusted to match the existing pavement buildup if greater than the minimum requirements. Utility trench repair shall be done within 48 hours of low strength mortar placement. During the period between placement of the low strength mortar and the utility trench repair, the trench shall be plated with steel plating of sufficient thickness and strength to support truck traffic. The plates shall be pinned to ensure no movement and the area on either side of the plate shall be ramped with cold patch.

1.30. TEMPORARY ROADWAY AND SIDEWALK

Temporary roadway buildup and temporary sidewalk shall follow Item 615 of the latest edition of the ODOT Construction and Material Specifications. The Contractor shall continuously maintain all temporary roadway in good condition, as determined by the LCDU with respect to safety and readability.

1.31. WARRANTIES

Contractor shall provide manufacturer warranties for all materials installed or furnished for a project. The warranty period shall begin upon Final Completion as defined herein, or such other date as agreed to by the LCDU in writing.

1.32. OPERATION AND MAINTENANCE MANUALS

For equipment that will be owned and/or operated by the LCDU, four copies of an Operation and Maintenance (O&M) Manual shall be furnished by the manufacturer. O&M manuals shall be submitted and approved prior to achieving substantial completion.

The O&M Manual shall give complete data on the equipment, and the manufacturer of the equipment, including parts list, lubrication instructions, model number, manufacturer's telephone number and address, local manufacturer's representative telephone number, name and address, etc., and shall be submitted to the LCDU for review no later than 30 days prior to the arrival of the factory trained service representative, when manufacturer's services are also required for the equipment.

1.33. SPARE PARTS

Spare parts will be required for those items as indicated in these Standards. The spare parts shall be furnished and delivered to the location designated by the LCDU and shall be properly labeled and packaged for extended storage.

1.34. PROJECT CLOSE-OUT

Final completion, correction of work as required in punch lists, provisions of acceptable record documents, waiver of liens from all subcontractors, suppliers, material men, etc., provision of required guarantees and the provisions of this document are required prior to project close-out. The maintenance bonds and warranties shall begin upon project close-out, which will be Final Completion.

The following list of documents must be completed and on file with the LCUD in order to receive final payment and final completion status:

- Maintenance Bond
- Affidavit of Payment
- Affidavit of Release Liens
- Certificate of Substantial Completion
- Consent of Surety to Final Payment
- Contractor's Certificate of Completion
- Final Waivers of Lien from each vendor used on the project (Original)

II. GENERAL – WATER SUPPLY

1.35. GENERAL

A. Consent To Rules And Regulations – Applications for water service shall be in writing and applicant shall pay all applicable fees as may be required under the Rules and Regulations of the

LCDU. Any violation of these rules shall be reason for discontinuance of water service until such time as the matter in question shall be corrected to the satisfaction of the County.

B. County Not Liable For Damage Caused By Interruption Of Service – The County shall not be liable for damage resulting from interruption in service. Temporary scheduled or non-scheduled shut down may be resorted to by the County for, among other reasons, improvements, meter testing, backflow device testing, or repairs of service connections or mains. Whenever possible, and as time permits, the LCDU will attempt to notify all customers prior to such shutdowns. The County shall not be liable for any damages due to failure of notification. The County shall not be liable for interruptions, shortage or insufficiency of supply or for any loss or damage occasioned thereby, if caused by accident, Act of God, fire, strikes, riots, war or any other cause. The County, whenever it shall find it necessary or convenient, for the purpose of making repairs or improvements to its system, shall have the right temporarily to suspend delivery of water and it shall not be liable for any loss or damage occasioned thereby. Repairs or improvements will be performed as rapidly as is practicable and, so far as possible, at such time as will cause least inconvenience to the customer.

C. No Guarantee Of Supply Or Pressure – The County does not guarantee a fixed supply or continuous pressure, these being subject to the variable conditions that may arise in the operation and maintenance of the water works. The County shall not be liable for damage due to change in pressure.

D. Chemical, Physical And Bacteriological Characteristics – The water furnished shall be equal to or exceed the standards established by the Safe Drinking Water Act adopted in 1974, and amended in 1986, or most current regulations and the Ohio E.P.A. where applicable. However, the County does not guarantee water as to quality, purity, or temperature. These all being subject to variable conditions which may arise in operations and maintenance of the water works. The County shall not be responsible for the production of water suitable for manufacturing and packaging process requiring water of peculiar or special characteristics.

E. Entrance To Premises – The LCDU reserves the right, through its authorized agents, to enter any premises to which the LCDU service extends, for the purpose of reading, repairing, installing, removing and inspecting meters aslo, for investigating cross connections or for any other purpose which the LCDU may deem necessary for the proper operation and maintenance of the water supply system. When access is refused, the water shall be immediately turned off and not turned on again until the request of the LCDU has been complied with, and an OFF and ON charge per the current rates is paid.

F. Tanks For Reserve Supply Should Be Provided – Consumers whose operations require a constant and steady supply of water, should provide against interruptions in the service by the installation of tanks, reservoirs or other auxiliary supplies sufficient to carry them over a period of interruptions of service, or over their own peak demand periods.

G. Notification Of Water Turn-Off To Mains – Before the water in a main is turned off, for reasons of repairs or alterations, the LCDU will attempt to notify all customers affected 24 hours in advance. The County shall not be liable for any damages due to failure of notification.

H. Stoppage Of Water Because Of Leaks, Etc. – In case of leaks or breaks, and/or failure in mains, services, pumping and auxiliary machinery, reservoirs or other water works equipment, the supply of water may be shut off without notice.

I. Turn Off Of Water To Customer – The supply of water through any service may be turned off and the contract therefore terminated by the LCDU for the following reasons, after an effort has been made by the LCDU to notify the customer that the water service to the subject premises is being discontinued.

1. For failure to promptly repair leaking Customer Branch after notice from the LCDU to do so. Water leaks that are not metered may be estimated and the cost charged to the customer at the current rate.

2. For the use of water on any premises other than that recorded in the application, except as may herein otherwise be provided for.

3. For cross-connection or interconnection with any other supply of water when not approved by the LCDU. This includes installation of pipe and fixtures such that a possibility of back-siphonage or back-flow, in the opinion of the LCDU or its designated representative, exists.

4. For tampering with or damaging any service pipe, meter, curb stop, corporation stop, or any other appurtenance, or the seal of any appurtenance.

5. For nonpayment of water bills, or other charges assessed under the terms of these Rules and Regulations.

6. For failure to provide reasonable and safe entrance to premises for the purpose of reading, inspection, installation, maintenance or removal of meter, and inspection of piping.

7. For making any additions or alteration in or about the Service Line without permission being obtained from the LCDU.

8. For failure to pay the water bill at any location for which a customer has a valid contract, or the water bill at any property for which a customer has guaranteed payment therefore.

9. For failure of a water user to execute a proper contract for a supply of water.

10. Water to vacant property may be turned off by the LCDU and the meter removed as soon as such vacancy becomes known, unless otherwise arranged for beforehand, and the contract terminated if, in the opinion of the LCDU, damage may be caused to building or its contents.

11. When a premises receiving temporary service has been completed to the extent that a meter could be reasonably protected and has not been installed.

12. Failure to comply with Section 6109.13 of ORC.

J. Re-establishment Of Water Service To Customer – The supply of water turned off under Paragraph 1.36.I will not be turned on again until the cause of the turn-off has been removed and all

charges, including a turn-on charge in accordance with the schedule in Section 7 – Fees, have been paid. Water to a premises shall be turned on only by employees of the LCDU when turned off for any of the reasons set forth in Paragraph 1.36.I.

K. Razing of Building – Abandoned Services – Before a permit to demolish or move a building is given by the County Building Department or the political subdivision's jurisdictional planning/zoning/building department, verification must be made by the LCDU that a deposit has been made to cover the cost of disconnecting all taps in the water main and sanitary sewer serving the subject premises.

1. When a service connected to the main with a corporation stop is abandoned, it shall be the responsibility of the owner to disconnect the service from the corporation stop. If an abandoned service is not disconnected by the owner, the L.C.D.U. will disconnect the service at the owner's expense. All services less than 1" in size must be disconnected at the water main. If the service line is at least 1" copper and installed in the last ten years, and reconnection is scheduled within one year, the owner may request an extension be granted by the L.C.D.U., to allow for the owner to decide on future use of lot.
2. When a service connected to the main by a tee or similar device is abandoned, the tee or device shall be abandoned by method determined upon plan review of the L.C.D.U.
3. An unused or abandoned water service shall be cut off and disconnected at the water main, and curb box removed, all to be done by a licensed sewer and water contractor at the expense of the property owner. All services less than 1" in size must be disconnected at the water main.
4. No new connection to a water main will be permitted until arrangements have been made for properly abandoning all unused water services on a site.

L. Discontinuance Of Service To Enforce Rent Payment, Etc. – Requests for discontinuance of service in legally occupied premises will not be honored or accepted for such purposes as eviction, enforcing collection of rents, or as a result of differences between owner and occupant.

M. Damages Due To Leaks – The LCDU disclaims any responsibility for damage by water to any personal or real property caused by leaks, broken, open pipes, meter, or fixtures.

Pumping on Private Premises – All pumps installed on private systems that are directly connected to the LCDU System must be of such type that no abrupt changes in pressure of any magnitude will be produced. All pumping equipment must be approved by the LCDU before installation. All existing pumping installations causing excessive fluctuations in the

LCDU distribution pipes or excessive reduction in pressure, must be discontinued use immediately until all requirements are met.

1.36. ADMINISTRATIVE

A. Types Of Accounts

1. Regular – All regular accounts are continuous, and shall be billed either Monthly or Quarterly. The designation of individual accounts shall be by the LCDU. All accounts that are designated as regular accounts shall be divided into categories as follows:

   a. Domestic
   b. Commercial Non Residential
   c. Industrial

2. Seasonal – This type of account shall be for Water Service for certain periods of the year only, such as for use in underground lawn sprinkling systems.

3. Hydrant – Hydrant accounts shall be those wherein contractors and others are permitted to take water from fire hydrants for construction or other temporary use. Such hydrant use shall be on a seasonal basis, between dates determined by the LCDU. A LCDU approved backflow device and meter shall be used. Refer to Section 1.41 AA for hydrant usage.

4. Fire Protection – This type of account is for Water Service for fire fighting only, through a system of pipelines terminating in private hydrants or sprinkler heads. Charges for hydrants that are used for fire protection are under this type of account.

B. Application And Contract For Water Service – An application for Water Service of any of the aforementioned types, made in accordance with these Rules and Regulations, when accepted by the LCDU, shall constitute a contract. Service will be continuous so long as these Rules and Regulations are complied with, until termination is requested by the customer, except as elsewhere herein specified for Seasonal or Hydrant Contracts.

Application for all types of Water Service must be made at the LCDU office on the forms provided. It must be signed by the person who is to be responsible for all charges arising from bills for water supplied or meter repairs, or by his authorized agent. The owner of the property shall be liable for any services, repairs and damages that are in accordance with these Rules and Regulations. Information regarding a customer's application and/or account status shall be considered public information. Any member of the public may request in writing information needed, stating their intent. The LCDU reserves the right to deny the request.

C. Water May Be Refused Delinquent Persons – No water shall be supplied to any premises, the owner of which is delinquent in the payment of water bills or who is indebted to the LCDU for materials, supplies or work done or in any other manner, until that indebtedness is paid, whether the

indebtedness was incurred at the premises for which service is applied or at any other place within the County and the LCDU reserves the right to shut off the water from any premises owned or rented by a person so delinquent upon giving five (5) days notice.

D. Bankruptcy Proceedings – Whenever a Customer is the principal in bankruptcy proceedings, the water service account will not be terminated if notice has been given to the County of said bankruptcy proceedings and arrangements have been made with the receiver for payment of said delinquencies.

E. Billing And Collection Periods – All accounts shall be billed monthly or quarterly as directed by the LCDU. However, meters may be read monthly or quarterly, in both of which cases the exact date of reading and billing is to be determined by the LCDU.

F. Time Limit On Payments – All water and sewer charges shall be due twenty (20) days from the billing date. All bills not paid within the twenty (20) day due period will be charged a late fee at the rate listed in Section 7, Fees. Notice of late fees will be posted on the next bill following the late bill. All bills not paid within thirty (30) days of the billing date will be considered delinquent. All delinquent water and/or sewer bills in addition to all unpaid late fees accrued by the account and an administrative fee as set forth in Section 7, Fees, will be certified to the County Auditor. Prior to certifying delinquent bills, the customer will be notified in writing of the department's intent to certify the delinquency. Water Service may be discontinued at any time after the LCDU has notified the customer that the water service to the subject premises is being disconnected. Water service shall be discontinued and shall not be restored again until all charges due and payable, including reconnection fees, are fully paid.

G. Estimated Bills – When it is not possible for a meter reader to gain entrance to a premise for the purpose of reading the meter, the amount of water used will be estimated on the basis of past-use on the premises in comparable periods, and a bill submitted to the customer for this amount of water. If access to read a meter is not possible for two (2) successive periods, the LCDU shall send the Customer a notice requiring either a remote reader be installed by LCDU personnel or access to the property be provided. If accommodations have not been made by the third (3) successive billing period to allow LCDU to either install a remote reader or access to the property has not been provided, the LCDU shall send the Customer a notice advising of possible termination of service. At the fourth (4th) successive billing period of non compliance, the LCDU shall send the customer a notice indicating the actual date service will be terminated. If compliance is not met by set date, service will be terminated.

When a meter fails to register or appears to be out of order, the amount of water used will be estimated on the basis of past-use on the premises in comparable periods, and a bill submitted to the customer for this amount of water. In the case of a failed meter, the LCDU will repair or replace the meter (See Section 7 for quarterly large meter charge), unless the failure was caused by Customer abuse, as defined in Section 1.41 M. in which case the Customer will be billed for the actual cost of the repairs. The LCDU shall send a notice requiring the Customer to provide access to the property. If accommodations have not been made by the second (2nd) successive billing period to allow LCDU to repair or replace the meter, the LCDU shall send the Customer a notice advising of possible termination of service. At the third

(3rd) successive billing period, the LCDU shall send the Customer a notice indicating the actual date of termination of service. A correction of estimated bills shall not be considered until compliance with the rules and regulations is met. Any corrections shall be based on an actual meter reading, historical data or average daily consumption determined from new meter readings. If the customer terminates their water service account, any refund may be credited on the final bill or when accurate usage can be determined at the discretion of LCDU.

When the LCDU determines that a meter has been registering inaccurately, LCDU reevaluate all prior billing periods from the initial billing or the last recorded meter accuracy test for that account, whichever is the most recent, and adjust all included billing periods using an average water usage as determined from actual readings taken from the repaired and tested or new replacement meter.

H. No Partial Payments Accepted – Partial payment of water bills will not be accepted unless, upon investigation by the LCDU it is determined that unusual hardship will result, in which case arrangements may be made for partial payments.

I. Bills Must Be Paid In The Order Contracted – Water bills must be paid in the order in which they are contracted and accordingly the LCDU will not accept payment of a bill when there is one delinquent against the same property.

J. Extension Of Time Payment – Because of unusual conditions and upon proper investigation thereof, the LCDU may extend the time of payment.

K. First Bill – New Account – The first bill for water service after the meter has been installed will be pro-rated in the manner prescribed for final bills.

L. Final Bills – Customer requests for final billing or termination of service will not be granted on the day of the request. Exceptions may be made if termination is deemed an emergency by the LCDU. Customers wishing to terminate water service on fire lines must do so in writing. Turnoffs on fire lines will be scheduled after written approval has been received from the fire department. It is the customer's responsibility to obtain fire department approval. When the LCDU is notified that the customer wishes to terminate the service, a final bill will be prepared, stating thereon all the charges required to be paid by the customer. If the meter is inside, the customer must arrange entrance to the premises for the LCDU, at which time a reading will be obtained to generate an accurate final bill. If a minimum amount of water has been used, the charge will be pro-rated for the proportionate part of the billing period which it covers, applied to the minimum rate or the unit price applied to the quantity of water used, whichever is greater.

M. Turn Offs/Turn Ons – There shall be no charge for turn off or turn on of Water Service during regular working hours for any reason other than as set forth in Paragraphs 1.36.I and 1.36.J.

N. Delivery Of Bills – When bills are sent or delivered to premises supplied with water, the occupant shall pay the bill if he is the Customer or if not, return the bill to the LCDU accompanied by a statement as to why the bill is being returned.

O. Listing Properties – Bills for water furnished, when requested by the owner of several premises served with water, accompanied by a list of these properties owned by him, will be mailed to the address specified.

P. Water May Be Shut Off Against Delinquents – Whenever an owner or consumer becomes delinquent in the payment of water bills or of any other obligation to the LCDU, the supply of water may be shut off from any premises of such owner or consumer, notice having previously been given as provided in these Regulations.

Q. Water To Be Turned Off At Main For Protection And Charge Therefor – In the case of water being turned off at the curb stop for non-payment of bills and it is found to have been illegally turned on again, or where in the opinion of the LCDU turning off the water at the curb stop is insufficient protection against illegal use of water, the corporation stop will be turned off at the main at the owners expense.

R. Adjustment Of Bills And Billing Review Board

1. Leaky Meter – If it is determined a meter provided by the LCDU has broken and water wasted registered through the meter, an adjustment will be generated based on the customer's average daily consumption.

2. Billing Review Board – If it has been determined a customer's water consumption is greater than the average daily consumption due to a water leak and the customer has not been negligent in repairing the leaks, the customer's account may warrant a review by the Billing Review Board. A written request asking the Billing Review Board to analyze their account for the consideration of an adjustment and a copy of receipts must be received before consideration is given. No additional review will be considered after the Billing Review Board has made their final decision.

S. Water For Public Improvements, When To Be Paid – Water used for Public Improvements performed under contract with the County shall be paid for before finalizing the final pay estimate to the involved Contractor.

T. Seasonal Accounts – An application for seasonal water service must be made at the LCDU office.

The LCDU shall furnish and set the meter in the location provided by the customer.

All meters will remain in place, unless the customer elects to have it removed. The inlet valve to the meter will be sealed when the seasonal meter is inactive. In the event the seal is broken by anyone other than the LCDU serviceman, the LCDU will bill the customer based on the last meter readings and all applicable penalties. When a compound meter is used on a seasonal account, the bypass on the meter setting shall be eliminated.

There shall be no charge to turn on or off of seasonal accounts of water during regular working hours. Turn on or turn off after regular working hours shall be in accordance with the schedule in Section 7 – Fees.

U. Providing Notice To A Purchaser Of Real Property As To The Status Of The Water And Sewer Account – The regulations of the County hereby require notice to a purchaser of real property as to

the status of the water and sewer account of said real property prior to sale. The Status of Water and/or Sewer Account form can be found at the end of this Section, Form 1.38.U.

V. Minimum Charge For Water Accounts For Unoccupied Property – There shall be no minimum charge for any property for which the County has removed the meter or otherwise terminated service. If the owner has not arranged for the County to remove the meter or otherwise terminated service there shall be a minimum charge as set forth in Section 7 – Fees.

1.37. WATER RATES

A. Permit For Use Of Water – It shall be a violation of these regulations for any person, association, firm or corporation to take water or in any way use water for private use which is furnished by the LCDU, unless such person, persons, association, firm or corporation shall have first paid for and received a permit for said use from the LCDU.

B. Water Rates, Meter Fees And Tap-In Fees – All premises which receive water from the LCDU shall be charged the appropriate fees and other costs as determined per Section 7 – Fees. The current rate structure is established through resolution by the Commissioners. The LCDU, or his duly authorized representatives, is hereby authorized and directed to cause the rates and charges so established be billed to all premises subject thereto and to keep and maintain records relating thereto. All charges shall be due and payable in accordance with the Rules and Regulations of the LCDU.

C. Free Service – No free service of any kind, shall be rendered to any user, including any public or private corporation, any public or private institution, charitable or otherwise.

D. Leased Premises – With respect to the services provided to leased premises, both lessors and lessee shall be responsible and liable for the payment of the charges herein provided. The County shall proceed to collect those charges from either the lessor or the lessee. The lessor must sign a water/sewer billing agreement with the LCDU in order for the lessee to receive and pay for water service usage. This Water Agreement can be found at the end of this Section, Form 1.39.D.

E. Water Treatment Plant Capacity Fee – The water assigned to the premises for which a connection permit is requested, shall be based on the water meter size for the premises at full utilization. All facilities, other than single-family residential units, shall be assigned such Water Treatment Plant Capacity that is equivalent to the portion of the water treatment plant capacity required to serve said facility. This capacity shall be determined by facilities meter size.

The current rate for water treatment plant capacity fees is listed in Section 7 – Fees. All other existing tap-in charges and or special assessments shall be paid in addition to the Water Treatment Plant Capacity Fee.

The payment of the water treatment plant capacity fee, and subsequent issuance of a permit assures that a portion of the water treatment plant is available for the permit holder's use. Water treatment plant capacity fees are calculated based on the property's improvements, and the owner or tenants' use of the property. If at any time, improvements are made, property use changes, or water demand increases, requiring a larger meter, the LCDU may recalculate the water treatment plant capacity fee and charge the customer accordingly. The LCDU will not buy back capacity once allocated.

Billing Service Charge - The Lake County Department of Utilities (LCDU) provides billing services to several communities in Lake County. In return for this service, LCDU will add to each bill a Billing Service Charge, at the rate listed in Section 7 of these Rules and Regulations.

1.38. HOMESTEAD EXEMPTION

Home owners currently receiving a homestead exemption reducing their water and/or sanitary service rates, that was established prior to July 1, 2007, will continue to receive the exemption and will pay the reduced rate until such time that the property granted the exemption is sold or otherwise changes ownership. No Homestead exemptions will be granted to any property after the July 1, 2007 date.

1.39. WATER SERVICES (TAP AND SERVICE LINE)

A. Application For The Installation Of Taps And Service Line– Taps and service line shall be installed to serve only those premises which are located on dedicated streets or thoroughfares or which abut a plot for which a Deed of Easement an easement agreement has been duly executed and accepted by the County of Lake. Service line connections may be obtained by applying at the LCDU office and making such payment as hereinafter provided. For all commercial non-residential and industrial applications and all applications of two or more separate units, a plot plan must be submitted with the application.

Such application shall contain the name of the owner of the premises, or his agent, the use to which water is to be applied, the name of the street, street number, lot number, permanent parcel number and plot plan of the premises to be supplied with water.

B. Installation Of Taps and Service Line Connections – Taps shall be installed only by duly authorized agents of the County or a contractor licensed by the LCDU. Installation will be made only after customer's branch has been properly marked and the LCDU has been notified.

C. Only County Personnel To Operate Valves, Stops, Etc. – Only duly authorized agents of the County shall:

1. Operate any valve, curb stop, or corporation stop.
2. Remove the cover from any curb box or meter box.

D. Payment For Taps And Service Line Connections – Advance payment of the established charge for tap and service line connection must be made by the applicant for water service. Schedule of current tap and service line connection charges are listed in Section 7 – Fees.

E. Charge For Installation Of Taps And Service Line Connection – All service lines less than 2-inch from the mainline to, and including, the curb stop shall be installed by the County or duly authorized contractor licensed by the LCDU. That part of the service line on the property side of the curb stop shall not be installed nearer than five (5) feet to any sewer trench horizontally and eighteen (18) inches vertically. The LCDU will maintain the water tap, which shall remain the property of the County.

F. Taps – Service Line (In Right-Of-Way)– All original taps and service lines, including tap and service line, shall be at least one inch (1") in diameter between the main and the curb stop outside meter vault.

Service lines from the main to the meter vault or curb stop two inches and smaller shall be Type “K” soft copper with flared fittings, and service lines over two inches shall be ductile iron, or Type “K” copper, the quality of both as approved by the LCDU. No other type of material shall be used from the corp stop to the meter setting or curb stop at the right of way.

G. Taps – Service Line (Outside right-of-way) Size – Plastic –Plastic pipe is permitted on service lines 2” or smaller from five (5) feet outside curb stop or meter vault at the right of way and shall be of type equal to 160 PSI, CTS, have #12 solid tracer wire and approved by LCDU. All plastic service line outside buildings shall have a minimum cover of forty-eight inches (48”) of earth. Type “K” soft copper may also be used outside of the right-of-way.

H. Repairs To Tap And Service Line Connection – Only authorized employees of the LCDU are permitted to make repairs to the Tap or Service Line Connection. When deemed advisable by the LCDU, the entire Service Line Connection will be replaced. Repairs to the Tap and Service Line Connection one and a half (1½) inches and smaller in size in all areas served directly by the LCDU, from the main to the curb stop and/or the outside meter vault, shall be assumed by the LCDU unless the repairs are made necessary because of work done by, or for, the owner, in which case the owner shall pay the full cost thereof.

Where any Tap or Service Line Connection is damaged by a contractor or other utility, the full cost of repairs shall be charged to those responsible for the damage.

I. Depth Of Pipe On Service Lines– All service lines two (2) inches and under outside buildings, from the main to the meter, shall be a minimum of forty-eight inches (48”) cover of earth, and/or surface materials such as pavements or gravel. Service line in crawl space and unheated buildings must be insulated to prevent freezing. All service pipes greater than two (2) inches in diameter require five (5) feet minimum cover.

J. Service Line Location And Construction – The Customer’s service line shall be installed in a direct line from the house to the street, and at right angles to the street. If the line enters the building from the side, it shall be installed at right angles to the street. The Customer’s Service Line shall not be laid closer than five feet to any drain, gas line, sanitary sewer service connections or other underground facility.

The Customer’s service line must be properly marked and approved by the LCDU before the LCDU will install the Service Connection. The owner and/or the customer or his representative shall notify the LCDU at the time that application for tap is made that the Customer’s Branch is properly marked. The priority of the tap installation will be as of the date the application is made.

K. Customer’s Service Line Leaks – When a leak on a Customer’s Service Line anywhere between the curb stop and the meter comes to the attention of the LCDU, the owner and/or customer shall be notified by notice left at the premises. If within twenty-four (24) hours the owner and/or customer has not taken steps to repair the leak, the water service line to the premises may be shut off at the curb stop. Water service to the premises will not again be restored until the ordered repairs have been completed. The total cost of repairs of services 2” and larger is the responsibility of the owner. Figures 1.41.1 and 1.41.2 contain limits of responsibility.

L. Limiting Size Of Main To Be Tapped – Water mains sixteen inches in size or larger are considered Trunk mains and not to be tapped for water service, except when approved by the LCDU.

M. Maintenance Of Service Lines – The County shall maintain in good repair at no cost to the customer that portion of the 1 1/2" or smaller service line between the street main and the curb stop, including the curb stop and meter angle valve located within the road right of way or water line easement limits. The customer shall maintain that portion of the service line on the property side of the curb stop in good repair and protect the same from frost at the owner's own cost. The customer shall prevent waste of water and no claim shall be made against the County for damage resulting from breakage of any service pipe or connection or damage arising from shutting off water to repair mains or for any other reason. See Figures 1.41.1 and 1.41.2 for limits of responsibility.

N. New Water Service Inspection Requirements – Water service will not be provided to premises unless opened customer's water line and sewer connection trenches are inspected and approved by the LCDU. Inspection charges and fees are indicated in Section 7 – Fees.

1.40. METERS RULES AND REGULATIONS

A. Service To Be Metered – All services shall be metered unless specifically exempted by these Rules and Regulations.

B. Services Not Required To Be Metered – Fire service lines do not need to be metered if used only for furnishing water for fighting fire through private hydrants.

C. Maintaining Metering Systems – The LCDU is hereby authorized to install, read and maintain metering systems to any and all properties served with water by the LCDU as further defined in Paragraphs 1.41.H and 1.41.N.

D. Entering Properties For Operation Of Metering Systems – The LCDU or its appointed agents are authorized to enter all properties served with water by the LCDU for the purpose of installing, reading, and maintaining the metering system per ORC 3745.95.03 (B).

E. Access To Property For Operation Of Metering Systems – Water service may be terminated for failure of a customer to provide access to the property for the purpose of installing, reading, or maintaining the metering system after being given notice and reasonable time to comply with such notice.

F. Meter, Number Allowed – No more than one meter shall be used per permanent parcel.

G. Sanitary Sewer Deduct Meter – In special cases the LCDU allows the use of a sewer deduct meter to award credit to a sewer use bill for metered water that is not discharged to the sanitary sewers, but is used for irrigation purposes. Only water service diverting water for irrigation purposes qualify for installation of a deduct meter. Existing services with deduct meters for uses other than irrigation may continue the use until the property experiences a change of use, property improvements, ownership, or tenant, in case of rental property; or is found in violation of any section of these Rules and Regulations. The following rules are to be applied when approving and administering the application of sewer deduct meters on the LCDU wastewater collection system.

1. Application for a Sewer Deduct Meter Permit – No customer shall install or have installed a deduct meter without first obtaining a permit from the LCDU. Customers wishing to apply for a Sewer Deduct Meter Permit must submit the following items to the LCDU prior to installation of the deduct meter:

a. a completed application form (Form 1.42.G, available from the Utilities Department Billing Office);
b. a building floor plan showing both the water meter and the proposed deduct meter locations; and
c. a plumbing schematic showing the deduct meter, pressure vacuum breaker fixtures and equipment down stream.

2. Deduct Meter System Design – The customer will be responsible for the design of the deduct meter system. The design shall be such that no water that flows through the deduct meter will be discharged to the sanitary sewer. The deduct meter must be located within a reasonable distance from the water meter, in a safe location that is easily accessible for reading. The deduct meter system must be designed such that no corrosive solutions or hot water from the customer's process is allowed to pass through the deduct meter causing meter damage resulting in inaccurate readings.

3. Meters – All deduct meters will be calibrated to read in 100 cubic foot units and be equipped with a remote register compatible with the LCDU's electronic reading system. All meters shall be fitted with shutoff valves on both the inlet and outlet sides. Meters shall be purchased from the LCDU. The Customer shall be responsible for all maintenance, repairs and/or replacement necessary for the deduct meter.

4. Inspection – The installation of the deduct meter system shall be inspected by the LCDU and shall be in accordance with accepted plumbing standards. The installation shall also be inspected and certified for compliance with these rules, by a licensed plumber after installation and once every year thereafter. Failure to meet the annual certification requirement shall result in the termination of the Sanitary Sewer Deduct Permit and the sewer use fee being charged upon all water consumed. The Customer will be responsible for the cost of all inspections and certifications.

5. Accessibility – If, for whatever reason, either the Customer's water meter or his deduct meter is not easily accessible for reading, no sewer deduction will be granted for that billing period.

6. Inaccurate Meter Registration – If it is determined by the LCDU that the water meter or sewer deduct meter is registering incorrectly, the reading on the deduct meter will not be deducted from the sewer use bill until such time that the customer has made the appropriate repairs.

7. Changes to a Customer's Sewer Deduct Meter System – Any time that the Customer changes, modifies or extends the sewer deduct meter system, he shall have the system inspected and recertified as described previously in Paragraph 1.41.G.4. Failure to meet the requirements of this Section will result in possible termination of sewer and/or water services, fines for tampering with the water and/or sanitary sewer system, and termination of sanitary sewer deduct permit.

8. Change of Tenant or Property Owner – Sewer deduct meter permits are not transferable. At any time when the use of a premises changes, as from the change of tenant or owner, the sanitary sewer deduct permit will be terminated. The new tenant or owner shall be required to reapply for a new sewer deduct meter permit.

9. Swimming Pools – Swimming pools do not qualify for a Sewer Deduct Meter Permit.

10. Permit and Inspection Fees – Sewer Deduct Meter Permit fees and inspection fees shall be as established by the Commissioners. See section 7.

11. Compliance with Other Meter Regulations – Deduct meters are subject to all the rules and regulations stated in Item 1.42 "Meters Rules and Regulations".

H. Installation Of Meters By LCDU Only – For all meters less than 2" the initial water metering system will be installed by the LCDU or contractor approved by the LCDU. This system will include the water meter, remote reader and if necessary wire to connect the remote reader to the meter. Installations of meters 2" and larger are the sole responsibility of the parcel owner. (See 2.25. M for alternate 2" meter options)

I. Removal Of Meters – Meters shall be removed only by authorized employees of the LCDU except as otherwise herein provided for. See Sections 1.41.N and 1.41.O.

Violations of this Regulation will result in a charge being added to the Customer's account for expenses incurred, in addition to charges for damage to or loss of meters, and charges for amount of unmetered water estimated to have been used.

J. Meters Subject To Inspection – ALL meters shall be subject to inspection by duly authorized representatives of the LCDU at any reasonable time per OAC 3745-95-03 (B).

Refusal to admit a duly authorized employee of the LCDU at a reasonable hour for the purpose of reading, inspecting, maintaining or changing a meter shall be considered a violation of these Rules and Regulations and shall be cause for discontinuance of service.

K. Attachments – Attachments of whatever nature made to the water pipes or other fixtures belonging to the LCDU and intended for public use shall be subject to the same supervision Rules and Regulations as are made for the protection of the LCDU against abuse, destruction and unnecessary use or waste of water.

L. Meters Shall Be Accessible – Meters shall be freely accessible and shall not be hidden or covered, by building materials, boxes or any other obstruction.

If the customer causes the obstruction of the metering system after its installation or requests that the installation be relocated and the LCDU agrees to perform such relocation, the customer shall be responsible for the actual cost of relocating any part of the metering system.

M. Customer To Protect The Meter From Freezing, Vandalism Or Other Type Of Negligence – The customer served through a meter located within a building on his premises shall make ample provision for the protection of the water supply against freezing or hot water damage. Damage caused by freezing or by the passage of hot water through the meter, shall be repaired at the cost of the

customer. Customers shall be held responsible for and shall reimburse the LCDU for the loss or theft of any meter furnished and maintained as hereinbefore provided.

N. Meter Repairs And Charges – The cost of repairs or replacement of meters may be necessary because of normal wear and deterioration, will be assumed by the LCDU. If the need for repairs or replacement of the meter is caused by freezing, hot water, negligence or malicious damage, a charge based on the actual cost will be made to the Parcel owner for repair or replacement of the meter. The determination to repair or replace any meter due to failure or due to inappropriate application, such as the wrong meter size or type, shall be made solely by the LCDU.

O. Tampering With Meter – No person except a duly authorized employees of the LCDU shall change or remove or break the seal on any meter after it is installed. Meters and appurtenances attached thereto shall not be tampered with. If the LCDU finds that a meter seal has been broken and/or there is evidence that a meter has been tampered with, water service shall be terminated and not restored until payment is made in accordance with the schedule in Section 7 – Fees to provide for the cost of resealing. The customer shall also pay for the estimated quantity of water that has not been registered because of said tampering before the water is turned on.

P. Type Of Metering System – The manufacturer and type of metering system to be installed for each customer must be approved prior to installation by the LCDU or his appointed agent.

Q. All Water Must Be Metered – No person shall consume or make use of water supplied by the LCDU for any purpose whatsoever, except as hereinafter provided unless such water shall have passed through a meter supplied or approved by the LCDU. The customer will be billed for installation cost as provided by Section 7 – Fees. The size of the meter to be installed shall be requested by the owner and approved by the County on the basis of estimated use requirements.

R. Meter To Be Approved By The County – All water meters used for all purposes such as water supply, air conditioning, lawn sprinkling, emergency supply, and reregistering connections shall be new and approved by the LCDU.

S. Bypasses On Meter Settings – All commercial non residential and industrial accounts size 2” and larger must have a by-pass line and a test port for the purpose of testing the meter without interruption or loss of service to the customer. Bypasses around meter settings will be required for four inch and larger meters based on individual application. Such by-pass installation shall be in accordance with the LCDU specifications.

T. Limitation Of One Service Line and Meter To Each Parcel – The installation of a service line and meter to serve more than one parcel shall be prohibited. If one line and meter is already servicing more than one parcel at the time this rule takes effect, said line and meter will continue to be allowed to exist as long as no other parcels are added, payment is made when due, and no other violations of these Rules and Regulations arise.

Upon the failure of any of said customers to pay the water bill when due or to comply with established Rules and Regulations of the LCDU, service to the entire line may be discontinued and/or each

individual unit may be required to install individual lines and meters at the direction of and in conformance with the requirements of the LCDU. The LCDU shall serve notice via regular United States Mail to all owners of parcels on same line that entire line will be discontinued. Additionally the LCDU shall also serve notice via regular United States Mail that separate services shall be installed within one hundred and twenty (120) days of said notice or water service will be discontinued. All requirements for water service connection shall apply.

U. Meter Settings and Locations – Gate valves must be provided on both the inlet and outlet sides of the meter and as close thereto as possible in accordance with the LCDU standards. Owner is responsible for valve maintenance and operations. See Section 2.25 for detailed meter setting requirements.

V. Testing Of Meters – Meters may be tested by the LCDU or at the request of the customer. If requested by the customer such request shall be in writing and shall be accompanied by the payment for established charge or estimated cost for the size of meter tested.

If upon testing the meter is found to be accurate in accordance with the LCDU specifications the testing charge shall be retained by the LCDU. If the meter is found to be inaccurate, the testing charge shall be refunded to the customer. Meter test accuracy limits based on AWWA standards.

Charges for testing meters shall adhere to the current rates in effect.

Two inch (2") and larger meters must be tested upon notification of the LCDU. The cost of such tests will be assumed by the LCDU. In addition, it may be necessary to remove the meter for testing, thereby temporarily interrupting service.

Customers will be given written notice by the LCDU of such tests, in order to prepare, during which time they can install a test plug and/or bypass. Every effort will be made to schedule tests at a time convenient for the customer. Where a test has been scheduled and it is found that the inlet or outlet valve on the customer's meter setting will not permit a tight shutoff, thereby delaying such test(s), the customer will be billed for an applicable labor charge in accordance with the current rates and will be expected to have the valve(s) repaired at the customer's expense. During this period of delay and until the repairs permit a rescheduling and testing of the meter, the customer will be billed for water consumption at an estimated rate to be determined by the LCDU. Cost for any meter replacement or repair indicated due to meter testing shall be as required in Section 1.41.N.

W. Remote Register Installation For Homes With Finished Basements – For residential and some commercial non residential single register meters, the owner must install wire as shown in figure 2.26.1, 2.26.2 or 2.26.3 leaving ample wire at point inside meter and at ECR touch read system. LCDU will make hookup of wire inside meter and attach ECR touch read system to the building.

X. Installation Regulations – To have a meter installed for a new or renewed service, including a meter to replace an existing meter of a different size, the property owner or his duly authorized agent in the name of the property owner, must make a written application for the service whereby the property owner assumes responsibility for the meter and all water bills and charges accruing for the service.

After all charges stated in these Rules and Regulations have been paid or complied with, the LCDU will then install the water meter.

Y. Temporary Water Service – Temporary water service means water used for short-term use when a permanent water connection is not practical or available at the time of use. This temporary short-term use will be evaluated on a case-by-case request by the LCDU If in the opinion of the LCDU it is determined to impact the water quality or the safety of the Public Water Supply System, the LCDU will refuse the request for temporary service.

Z. Temporary Bulk Water – The LCDU will provide temporary bulk water sales to supplement water use when a permanent water connection cannot be made or water service is not available at time of use. These water supplies can be obtained from either the Aquarius Facility at 38270 Aquarius Parkway, Willoughby, Ohio; or the Bacon Road Facility at 1845 Lake Road, Painesville Township, Ohio.

Potable water haulers must present an annual Health Department Inspection Certification to the LCDU each year. This certificate is to be presented upon receipt from the Health Department.

Water for construction or other special use will also be provided at these Facilities. It is the responsibility of these water haulers to adapt connections to LCDU piping. Cost of this service will be at the current rate charged by the LCDU. See Section 7 – Fees.

AA. Temporary Water Service Rental Meters – The LCDU will provide for the availability of certain hydrants designated by the LCDU to use with approved meter and backflow preventer for temporary short-term water use when a permanent water connection cannot be made or water service is not available at the time of use. The LCDU reserves the right to refuse any temporary use of water if in the opinion of the LCDU it is detrimental or harmful to the safety of the Public Water Supply. Approved meters and Backflow Prevention Devices will be supplied by the LCDU upon approval of use and all applicable fees and deposits are made. Cost of this service will be at the current water rate charged by the LCDU. See Section 7 – Fees.

Temporary water service rental meters are not to be used for long-term service. Any customer who continually uses a temporary water service for three (3) years at the same location where a permanent water supply is available will be require to tie into the permanent Public Water Supply.

1.41. DISCONNECTING SERVICES AND REPAIRING BREAKS

A. Permissions – No Contractor is permitted to disconnect services and repair breaks on mains in connection with the installation of sewers, etc., without prior notice to the LCDU. All work is to be conducted with an inspector from the LCDU present. The cost of the inspector shall be borne by the Contractor.

B. Procedure For Disconnecting Services And Repairing Breaks – Procedures to be followed where contractors are permitted to disconnect services and repair breaks on mains in connection with the installation of sewers, etc.

1. Services

a. Contractor to disconnect services when using a construction box, roll services out of the way and reconnect the service when passed.

b. All service lines are to be plugged and capped to prevent contamination.

c. Customer is to be notified by the Contractor, prior to the disconnect and is to be served with water by hose if service is to be disrupted more than two (2) hours, if this is agreeable with the customer.

d. The LCDU is to be notified and all services, whether they were disconnected or not, are to be inspected and approved prior to backfilling. The full circumference of the service pipe is to be available for inspection.

e. Any services that are backfilled prior to inspection shall be uncovered either by the Contractor or the LCDU and inspected at the Contractor's cost.

f. The Contractor shall be charged for all expenses incurred by the LCDU on this work, including inspection, correction of faulty installation, damage to piping and meters due to foreign material, and other necessary work.

g. The Contractor shall have in full force and effect the necessary insurance, bond and shall save the County of Lake harmless from any action arising from said repairs.

2. Water Main Removal

a. When a water main has to be removed, for the Contractor's convenience, the LCDU will remove and reinstall the main at the Contractor's expense, or the Contractor may be permitted to perform the work under the direct supervision of qualified LCDU personnel, as determined by the LCDU or its authorized representative.

3. Broken Water Mains – When a main has been broken by a Contractor, the following procedures shall be followed by the Contractor:

a. The LCDU shall be immediately notified.

b. The water shall then be shut off by the LCDU only.

c. The affected customers shall be immediately notified by the Contractor.

d. A sump hole shall be dug below the break so that when the sump is pumped out the dirty water will drain out of the break.

e. Valves shall be cracked on either side of the break and the line flushed out into the sump prior to repairs.

f. The Contractor may make the repair in a manner and with materials approved by the LCDU, however, at the time the repairs are being made the LCDU must have an inspector on the job to supervise the repair work.

g. The Contractor shall be billed and shall pay for all LCDU costs.

h. The Contractor licensed by the LCDU shall have in full force and effect the necessary insurance, bond and shall save the County of Lake harmless from any action arising from said repairs.

C. Installation And Repairing Of Mains – All new, cleaned or repaired water mains serving community water systems or major non-community water systems shall be disinfected in accordance with AWWA C651 – Disinfection.

D. Temporary Discontinuance Of Service – When any person or persons and/or Contractors shall require a temporary discontinuance of service, it shall be the understanding of the LCDU that the request shall mean that the water will be turned off at the curb box.

1.42. FIRE PROTECTION SERVICE

A. Fire Service Plans – Applications for fire protection services must include three (3) plans prepared by an Ohio Registered Professional Engineer indicating location of building or buildings, piping and appliances to be used, supply requirements, location of all pipes, branches, risers, by-passes, valves, check valves, pumps, tanks, cisterns and other regulating or operating devices.

B. Fire Line – The Fire Line shall be sized to convey the fire flow plus the regular flow, if any.

C. Fire Pumps – Fire protection pumps to be connected to independent fire lines only.

D. Metered Supply – Services that provide fire service only are not required to be metered. Services that combine domestic service with the fire service on a single line shall be metered at the street right-of-way, using the combination meter and backflow assembly shown in LCDU's standard detail Fig. 2.25.5. Use of a combination fire and domestic service is reserved for high flow services, such as apartment buildings and condominium communities, where the flow will be sufficient to flush the service line, maintaining a sufficient level of residual chlorine in the line. Demonstration of a sufficient flow to warrant the use of a combination meter is the customer's responsibility. Metered fire lines are not subject to quarterly fire line charges. Towers, tanks and cisterns must be filled from metered supplies.

E. Air Gap – Tank, tower or cistern supply pipe must be a minimum twice the diameter of the feed pipe above top of tank. Metering Of Jockey Pump – It is not necessary to supply a jockey pump with metered water where all piping for fire line is above ground. Where underground piping is involved, a jockey pump meter of one inch (1") in size or larger may be required from fire line to jockey pump.

F. Low Pressure Cut-Off Switch – Since there exists a possibility that a fire service pump will cause a loss of pressure within the public water supply thereby causing conditions where backflow could endanger water supply quality, a low pressure cut-off switch will be necessary. It shall be the duty of the water customer to maintain the device in proper working order and provide a copy of the certified test to the LCDU, at least once a year, that the device is operable.

G. Unauthorized Use – Where water from fire protection services is wasted, or used contrary to County rules, the LCDU may order a meter furnished and set by the water district at the expense of the water user.

H. Rate Schedule – A flat rate charge shall be made for each unmetered fire supply within the County Water System. Charges shall be set in accordance with the current rates established in Section 7 – Fees. The fire service provided is principally of standby nature-that is, readiness to deliver relatively large quantities of water for short periods of time at any of a large number of points in the water distribution system.

Charges for this service shall be collected quarterly for each fire connection to defray the expense of the water treatment and distribution system pump capacity required to provide the fire protection plus the cost of the water used to fight fires. These rates are subject to change by the Commissioners.

Backflow Prevention Of Fire Lines – All fire lines are required to have a double detector backflow assembly installed.

1.43. CROSS CONNECTIONS

No person shall install or maintain a water service connection to any premises where actual or potential cross-connections to the public water system may exist unless an approved backflow prevention device has been installed on each service line to the premises.

All requests for water service shall be reviewed for cross-connection in accordance with the requirements of the Ohio EPA Manual of "Backflow Protection and Cross-Connection Prevention". Where required, backflow prevention devices shall meet all requirements of the Ohio EPA Manual of "Backflow Protection and Cross-Connection Prevention".

III. GENERAL – SANITARY SEWERAGE

1.44. SEWER RATES

A. All properties located within the Lake County Regional Sewer District that receive sewer service from the LCDU shall be charged for sanitary sewer usage as calculated from the metered water usage for the property, or a minimum charge, which ever is greater, and as set forth in Section 7-Fees, of these Rules and Regulations. The current rate structure is established by the County Commissioners by resolution.

Where public water service is not used, the well water for the properties must be metered. Well water meter shall be per LCDU specifications.

B. A reduced minimum charge is available for properties that are unoccupied for an extended period of time. In order to qualify for a reduced minimum sewer service charge, the property must be unoccupied for a period not less than three (3) months, and:

1. The owner of the premises must provide the County with a statement from the water supplier that the water service to the premises has been terminated for a period of not less than three (3) months. It is the responsibility of the owner to provide the County with a statement from the

water supplier setting forth the dates of termination and restoration of water service to the premises, within one year of the date of termination and each year thereafter until service is restored. In the event a property owner fails to notify the County of the restoration of water service, no reduction of sewer service charges shall be permitted. Where public water service is not used, the well water must be metered and a reading obtained by a LCDU representative prior to termination and after restoration of service.

2. In the event the premises may not be legally occupied, the owner shall provide the County with a statement from the responsible authorities setting forth the reasons why the premises may not be legally occupied. Any premises that may not be legally occupied for a period of at least three (3) months shall receive a reduced charge at the current rate in effect.

The Application for Reduced Sewer Service Charge can be found at the end of this Section, Form 1.46.

C. Sanitary sewer connections that have been cut or capped by the owner shall be exempt from any sewer service charge until such time as the premises are reconnected. Any premises to be so reconnected after being cut or capped shall be by permit issued by the LCDU.

D. LCDU may assign an Infiltration/Inflow (I/I) Surcharge Rate to the accounts of individual properties which are identified to contribute I/I to the public sanitary sewer from their private sanitary sewer lateral. The surcharge shall remain in place until paid in full and the private I/I source is corrected. The surcharge on the sewer bill shall be based on the current metered wastewater service charge and the Infiltration/Inflow volume estimated by LCDU.

1.45. SANITARY SEWER SERVICE CONNECTIONS

A. No person or persons, firm or corporation, or any employee of such persons, firm or corporation shall tap any sanitary sewer or lay any house connection pipe, or dig in or open any street, road, or other public way for the purpose of tapping any such service or laying any such house connection, unless such persons shall have first obtained from the Commissioners a license for doing such work. The work shall, at all times, be under the supervision of the Sewer/Water Contractor licensed to do such work. This supervision shall be continuous, on-the-job supervision. These rules shall not prevent any licensed Sewer/Water Contractor from building house laterals from a sanitary sewer being built under contract under the supervision of the LCDU, provided, however, that the licensed Sewer/Water Contractor first secures permission in writing from any contractor building such sewer.

B. No connection with any sewer or repair or removal thereof, or any excavating therefore shall be made without a permit from the LCDU. A fee will be charged for any such permit. The Sewer/Water Contractor or the Owner shall make written application for each permit. This application shall contain the name and address of the Owner, the name of the Sewer/Water Contractor, the location of the property, (street and address, allotment or subdivision and sub lot parcel number). No permit will be issued

unless this information is submitted in writing. All building connections require rough plumbing permit prior to permit.

C. For commercial, non-residential or industrial connections only, when, in the opinion of the LCDU, delaying the installation of the connection until the rough plumbing permit has been issued or the floor slab is in place constitutes a hardship, a lateral extension prior to final connection may be granted. The Owner or Sewer/Water Contractor must submit a written request for a lateral extension, stating the reason the lateral extension is needed. The LCDU will review each request to determine if a hardship truly exists. Granting a lateral extension is at the sole discretion of the LCDU. Once a lateral extension is granted the Owner or Sewer/Water Contractor will pay all connection and tap-in fees and post a lateral extension deposit as listed in Section 7 of these Rules. The lateral extension deposit will be returned to the Owner or Sewer/Water Contractor after final inspection of the building connection. If the Owner or Sewer/Water Contractor does not call for inspection of the final connection or the final connection is otherwise found improperly performed:

1. the Owner or Sewer/Water contractor will uncover the connection for inspection and will correct any errors identified by the LCDU's representative;
2. the lateral extension deposit will be forfeited, and;
3. billing will commence on the date the lateral extension was made.

The final connection to the proposed building must be made within 120 days of the inspection of the lateral extension. The entire lateral will be tested when the final connection is made. If construction of the final permitted lateral is not made within the 120 day period, LCDU will inspect the project site on a weekly basis until the final connection is made. The property owner will be required to pay these additional inspection costs.

D. Permits shall be kept on the job at all times while the work is in progress.

E. All work shall be done in the presence of an authorized representative of the LCDU. Any work covered previous to the inspection shall be uncovered by the Sewer/Water Contractor and an opportunity must be given to inspect the inside as well as the outside of the sewer pipe. The actual tapping of a connection into the sanitary sewer and the connection at the house shall be done only in the presence of a LCDU representative. All materials and workmanship shall be in strict accord with the sanitary sewer specifications of the LCDU governing such work and the same is hereby made a part of these Rules and Regulations and as specified in Section 3 of these Rules and Regulations.

F. The LCDU shall approve the quality of all materials and workmanship, and shall have the right to inspect the same at all times. The LCDU may order removal from the job any inferior or defective material, and may cause to be re-laid any portion of a house connection that is not laid to its satisfaction. Refusal to carry out the instruction of the LCDU will result in the LCDU recommending revocation of the Sewer/Water Contractor's license to the Commissioners. The LCDU shall have free access to all buildings and fixtures therein connected to the sanitary sewers to inspect such fixtures. The

LCDU in any duty prescribed by these Rules and Regulations, may act through properly authorized representatives.

G. The sanitary sewers shall be used for all water borne wastes from water closets, urinals, lavatories, normal kitchen, bathroom and laundry fixtures, refrigerators, water or soda fountains, cellar and garage floor drains or other fixtures which may be designated by the LCDU whether from residences, factories, commercial, non-residential buildings or enterprises, trailers, schools or other public or private buildings, wherever and however located, and for no other purpose except by special written permission of the LCDU. Wastes from the above sources shall hereinafter be called “sanitary wastes”. No such sanitary wastes shall be allowed to enter any storm sewer, storm ditch, watercourse, stream or pond. No wastes which are likely to cause damage or stoppage of sanitary sewers or which may interfere with the treatment thereof will be permitted to enter a sanitary sewer. Grease interceptor for restaurants shall be minimum 500-gallon capacity and be designed by a professional engineer. Vehicle service garages must have oil separators. Grease interceptor and oil separators are to be cleaned and maintained on a routine basis as established by the pretreatment regulations in Section 5 of these rules and regulations. A “Guidance Document for Sizing and Installation of Grease Interceptors” is available in Section 1, Exhibit Q of these Rules and Regulations.

H. In no case may storm, surface or ground water, or water from drain spouts, roofs, cisterns, yard drains, subsoil drains, footer drains, foundation drains, or waste material from water motors, cooling water, or excessively hot waters be allowed to enter a sanitary sewer.

I. Vaults, cesspools, and septic tanks serving homes shall be subject to the Rules and Regulations of the state and/or local health department.

J. Before receiving a permit for any work requiring excavation in any street, highway or road right-of-way, the person desiring to make such excavation shall obtain from the proper authority the required permit for each excavation and shall agree to comply with all the requirements of the issuing authority, or shall obtain a written statement by that authority that no road opening permit is required. This permit shall be shown to the LCDU representative at the commencement of construction and shall be kept “on-the-job” at all times, while work is in progress.

K. If any Sewer/Water Contractor shall neglect or refuse to do anything required by these Rules and Regulations within a reasonable time after receiving written notice from the LCDU to do so, the LCDU may cause such work to be done and charge the same to the Sewer/Water Contractor and unless such charges are paid, the LCDU shall recommend to the Commissioners that the Sewer/Water Contractor’s license shall be revoked. The Sewer/Water Contractor’s diligence in making restoration of damaged property, settled backfill or reseeding for which he is responsible, will be considered in continuing the Sewer/Water Contractor’s license and in issuing permits to the Sewer/Water Contractor.

L. In the case of paving or sidewalks that are damaged or removed in the laying of any house drain or in doing other work specified under these rules or that shall need repair or renewal within one year after the completion and approval of such work, the Owner, shall, upon receiving notification in writing from the LCDU of the necessity for such repairs or renewal, immediately perform or have performed the

work called for in such notification. Upon failure of such Owner to do the work within a period of 96 hours after such notification, the LCDU may cause such work to be done either by contract with some capable person, without advertising, or by such other arrangements as may be most convenient and satisfactory, and the bill for the entire cost of the same shall be rendered to the Owner who shall be liable for and shall pay such bill at once.

M. All sanitary mains constructed as an assessment project shall include a lateral service connection for each buildable parcel fronting the improvement. Where a parcel may be split in accordance with the local zoning laws to create multiple parcels fronting on the improvement, lateral connections will be provided for the maximum number of parcels allowed by the zoning rules.

N. All sanitary mains constructed as non-assessment projects, may be constructed without lateral service connection to any parcel where the parcel owner chooses to not participate in the project. It is the responsibility of the individual, organization, or agency of private enterprise constructing the improvement to contact the owner of each parcel with frontage on the improvement to ascertain weather the owner requires that a lateral connection be provided to the parcel

O. Separate parcels cannot share a single private connection except as described in section 1.10. Approval of plans, paragraph B.3, Case3. A separate and individual sanitary sewer connection shall be made to each parcel. A connection may serve more than one building on that parcel, provided the parcel cannot be split according to the local zoning requirements.

P. The LCDU shall allow or disallow the use of any material for house connections or sanitary sewer mains. The LCDU shall have the authority to make a change in materials authorized for use in systems under its jurisdiction at any time.

Q. The LCDU is granted the right to enter any and all properties and buildings, public and private, to inspect sewer connections and any appurtenances thereto, to collect samples of wastes, and to test for violations of these Rules and Regulations.

R. Forty-eight hours written notice shall be given prior to the start of any construction so as to allow the LCDU ample time to schedule a LCDU representative. It is the Sewer/Water Contractor's responsibility to insure the delivery of this notice. This notice shall state the permit number, street, sub lot number and anticipated construction time required for the inspection requested. The Sewer/Water Contractor shall immediately inform the LCDU of any unforeseen delays or postponements prior to 7:15 A.M. of the day for which inspection was arranged. No work shall be performed without the LCDU representative being present without the consent of the LCDU. Forms of this notice are available in the LCDU's office for this purpose without charge.

S. The presence of the LCDU or its authorized representative does not relieve the Sewer/Water Contractor of his duty to protect any structures either above, below or at the surface of the ground or should any damage arise due to the negligence of the Sewer/Water Contractor, it shall be his bonded duty to make right any such damage within a period of 96 hours, or failing this, the LCDU may cause such damage to be repaired or the damaged property replaced either by contract, with some capable person, without advertising or by such other arrangements as may be most convenient and satisfactory, and

the bill for the entire cost of the same shall be rendered to the Sewer/Water Contractor who shall be liable for and shall pay the same at once, subject to the revocation of his Sewer/Water Contractor's license.

T. The LCDU is responsible for the maintenance of main and trunk sewers and the branch tee fittings only. Maintenance of service laterals from the tee fitting or saddle connection at the main to the property structure or structures is the responsibility of the customer. Where a service lateral is damaged by a contractor or other utility, the full cost of repairs shall be charged to those responsible for the damage. See Figure 1.47.1 for limits of responsibility for sanitary sewer service connections.

U. Free Service- No free service of any kind shall be rendered to any user including; any public or private corporation, any public or private institution, charitable or otherwise.

V. Leased Premises- With respect to the services provided to leased premises, both lessor and lessee shall be responsible and liable for the payment of the charges herein provided. The County shall proceed to collect those charges from either the lessor or the lessee. The lessor must sign a water/sewer billing agreement with the LCDU in order for the lessee to receive and pay for water service usage. This Water Agreement can be found at the end of this Section, Form 1.39.D.

W. Estimated Usage- Users for which records of actual metered water consumption are not available shall be billed an amount based upon an estimate of their water consumption for that quarter. That estimated water consumption shall be based on historical data for the subject premises or as otherwise determined by the Director of Business Operations of the Lake County Department of Utilities or his duly authorized representatives.

X. Manholes- For purposes of maintenance and inspection, manholes providing entry into the public sanitary system which are located on private property shall remain fully accessible and free from any and all obstructions by the property owner. The LCDU reserves the right to, by any means necessary, expose any inaccessible manhole on private property when necessary. The LCDU will not compensate the private property owner for damage caused to the property as a result of making a manhole accessible.

1.46. SANITARY WASTEWATER TREATMENT PLANT CAPACITY FEE

The sanitary sewer wastewater treatment plant capacity fee assigned to the premises for which a connection permit is requested shall be based on meter size for the premises at full utilization.

All facilities, other than single-family residential units, shall be assigned a flow value equivalent to the portion of the wastewater treatment plant capacity required to serve said facility. This equivalent shall be determined by the facilities meter size.

All other existing charges and or special assessments shall be paid in addition to the Sanitary Sewer Wastewater Treatment Plant Capacity Fee.

The payment of the water treatment plant capacity fee and subsequent issuance of a permit assures that a portion of the water treatment plant is available for the permit holder's use. Water treatment plant capacity fees are calculated based on the property's improvements and the owner or tenants' use of the property. If at any time, improvements are made, property use changes, or water demand increases requiring a larger meter, the LCDU may recalculate the water treatment plant capacity fee and charge the customer accordingly. The LCDU will not buy back capacity once allocated.

1.47. DISPOSAL OF SEPTIC TANK WASTES

A. Prohibited Discharges – No person, firm or corporation shall discharge wastes collected from septic tanks into any manhole or other appurtenances of any sanitary sewer or into any watercourse within or flowing into the Lake County Regional Sewer District.

B. Permitted Discharges – Only domestic sanitary wastes will be accepted by the LCDU. Wastes collected from septic tanks shall be from locations within Lake County and the discharge thereof shall be permitted only at the Gary L. Kron Water Reclamation Facility. No industrial or toxic septic tank wastes may be disposed of under the terms of this Item. The County reserves the right to monitor and/or test any septic tank discharges; in the event a septic tank hauler disposes of toxic or industrial waste, the license of that septic tank hauler shall be immediately revoked by the County. The septic tank hauler must designate the location from which the septic tank wastes are being collected.

C. Permit Fee – Permits for discharge by tank vehicles to the Gary L. Kron Water Reclamation Facility of wastes collected from septic tanks shall be obtained from the LCDU. A separate permit shall be obtained for each tank vehicle. Permits must be renewed annually and the fee will be as shown in Section 7 – Fee Schedule. Haulers licensed under this section of the regulations must also be licensed to dispose of septic tank wastes by the Lake County General Health District.

D. Disposal Fee – Any person, firm or corporation discharging wastes into the wastewater treatment facilities of the Gary L. Kron Water Reclamation Facility must use those locations designated by the LCDU or its representatives and shall pay a rate per gallon as a disposal charge for septic tank wastes collected in Lake County or discharged within the Gary L. Kron Water Reclamation Facility. See Section 7 for current fees.

E. Penalty Provisions – Any person, firm or corporation violating the provisions of this Chapter shall be subject to any penalties provided by law. In addition, such person, firm or corporation shall be liable for any expense, loss or damage occasioned by reason of such violation.

Form 1. 01.E

APPEALS BOARD APPLICATION

Lake County Department of Utilities

Application is hereby made for review of a decision, determination or requirement of the Department of Utilities.

Name: _____

Address: _____

_____

_____

Phone: _____

Fax: _____

Contact: _____

Detailed explanation of request for appeal:

_____

_____

_____

_____

_____

_____

_____

_____

_____

_____

_____

_____

_____

Please attach any additional information that you regard as helpful in explaining your appeal.

I hereby certify the statements made herein are true to the best of my knowledge.

_____ Date: _____

Signature of Applicant

Received by: _____ Date: _____

Submit form to: Lake County Department of Utilities Board of Appeals
105 Main St.
P.O. Box 490
Painesville, OH 44077
Attn: Angela Keck

Form 1.38.U

LAKE COUNTY DEPARTMENT OF UTILITIES

STATUS OF WATER AND/OR SEWER ACCOUNT

NAME _____ DATE _____

ADDRESS_____ TELEPHONE NO. _____

ACCOUNT NO._____ TRANSFER DATE _____

PERMANENT PARCEL NO._____ $ _____

AMOUNT OF BILL DUE AS OF _____ $ _____

$ _____

$ _____

LAST METER READING DATE _____

FINAL READING HAS NOT BEEN INCLUDED. ARRANGEMENTS MUST BE MADE TO HAVE FINAL METER READING TAKEN.

Regulations adopted by the Lake County Board of Commissioners on _____ provide that notice be given to the purchaser of real property as to the status of the Water and/or Sewer Account of said real property prior to sale.

All delinquent Water and/or Sewer Accounts must be paid in full before service will be provided.

_____	_____	_____
(Signature of Seller)	(Date)	(Cashier)
_____	_____	_____
(Signature of Buyer)	(Date)	(County Sanitary Engineer)
_____	_____	
(Signature of Escrow Agent)	(Date)	

Lake County Department of Utilities

125 E. ERIE ST. SUITE 7
PAINESVILLE, OH 44077
(440) 918-2070 (440) 350-2070 (440)298-3334 ext2070

Form 1.39.D

IV. WATER/SEWER BILLING AGREEMENT

_____
Current Date

RE: Account Number: _____
Service Address: _____
_____

The persons whose signatures appear below as "Property Owner" make the following representations to the Lake County Department of Utilities:

(1) They are the record owners of the real property located at the address above;
(2) **They are directing and authorizing the Lake County Department of Utilities to mail bills for water and/or sewer service delivered to the address above to the following tenant(s) who reside at the address above:**

Tenant(s): _____

(3) In the event of non-payment of any water or sewer service charges they are directing and authorizing the Lake County Department of Utilities to terminate water and/or sewer service to the address above and to certify such water and/or sewer charge delinquencies to the Lake County Auditor for collection with real estate taxes to the premises.
(4) We understand and agree that this billing arrangement will continue until Owner terminates it. In the event that Owner wishes to terminate this arrangement, it is Owner's responsibility to contact the Lake County Department of Utilities.

Sincerely,

_____ _____
Signature of Property Owner Date

_____ (___)_____
Printed Name of Property Owner Property Owner's Telephone Number

_____
Property Owner's Street Address

_____
City State Zip Code

Form 1.42.G

LAKE COUNTY DEPARTMENT OF UTILITIES
APPLICATION FOR SEWER DEDUCT METER INSTALLATION

Acct # _____ Bk/Pg # _____

Account Name _____

Service Address/City _____

Contact Person _____

Phone # _____ Cell # _____

REASON/USE FOR SEWER DEDUCT:

_____

_____

_____

_____

_____

_____

_____

_____

Signature _____

Date _____

Instructions: Return completed form together with attachments indicated in sections 1.42.G.1.b & 1.42.G.1c of the Lake County Department of Utilities Rules and Regulations (see reverse side) to LCDU, Attn. Engineering Division, P. O. Box 490, Painesville, OH 44077.

Form 1.46

LAKE COUNTY DEPARTMENT OF UTILITIES **FAX 440-350-2064**
APPLICATION FOR REDUCED SEWER SERVICE CHARGE

NAME _____

ADDRESS _____

PERMANENT PARCEL NO. _____ACCOUNT NO. _____

PREMISES HAVING WATER SERVICE TERMINATED
TYPE OF ACCOUNT

SEWER:		**WATER:**	
REGULAR	_____	REGULAR	_____
COMMERCIAL NON RESIDENTIAL	_____	COMMERCIAL NON RESIDENTIAL	_____
INDUSTRIAL	_____	INDUSTRIAL	_____
SEASONAL	_____	SEASONAL	_____

WATER SUPPLIER*/ EMPLOYEE'S SIGNATURE _____

DATE OF TERMINATING SERVICE _____

DATE OF RESTORATION OF SERVICE** _____

REDUCED SEWER SERVICE CHARGE SHALL BE APPLIED RETROACTIVELY TO ACCOUNTS QUALIFYING FOR THE REDUCED CHARGE AFTER THE PREMISES HAS BEEN UNOCCUPIED FOR A MINIMUM THREE MONTH PERIOD.

PREMISES WHICH CANNOT BE LEGALLY OCCUPIED

REQUIRES STATEMENT FROM LOCAL AUTHORITIES THAT PREMISES CANNOT BE LEGALLY OCCUPIED.

OWNER _____

APPROVED BY
BILLING DEPT. _____

REDUCED SEWER SERVICE RATE FOR QUALIFIED PROPERTIES IS CURRENT RATE ESTABLISHED BY THE LAKE COUNTY BOARD OF COMMISSIONERS

* Required statement from water supplier that water service has been terminated at premises. Minimum required period of non-occupancy is three months.

** Failure to notify the County of restoration of water service to the premises will result in full sewer service charges being applied to the premises for all billing periods.

Well water must be metered and a reading obtained by the Lake County Department of Utilities representative prior to termination and restoration of service. Meter shall be per Lake County specifications.

H:\Utilities\Excel\Form Minimum Sewer Chg.xls

EXHIBIT A
GENERAL WATER NOTES
LAKE COUNTY DEPARTMENT OF UTILITIES

1. ONLY WATER/SEWER CONTRACTORS LICENSED BY THE LAKE COUNTY BOARD OF COMMISSIONERS MAY INSTALL WATER MAINS.

2. THIS APPROVAL BY THE LCDU SHALL EXPIRE IF THE WATERLINE CONSTRUCTION HAS NOT BEEN INITIATED BY A DEVELOPER WITHIN (12) MONTHS OF THE EFFECTIVE APPROVAL DATE AS SHOWN ON THE ORIGINALLY SUBMITTED FOR APPROVAL BLUEPRINT COPY. (THIS IS NOT TO BE CONSTRUED AS THE DATE THAT IS SHOWN ON THE ORIGINAL MYLAR TITLE SHEET.)

3. THE CONTRACTOR SHALL NOTIFY THE LCDU AT LEAST 48 HOURS IN ADVANCE OF ANY WORK IN THEIR SYSTEMS.

4. THE LCDU SHALL PERFORM INSPECTION SERVICES. THE COST OF INSPECTION SHALL BE INCLUDED AS PART OF THIS CONSTRUCTION PROJECT AT THE CURRENT BASE RATE AS ESTABLISHED BY THE LAKE COUNTY BOARD OF COMMISSIONERS. (SEE SECTION 7 FEE SCHEDULE) COST FOR LAKE COUNTY INSPECTION FEE AND OTHER FEES SHALL BE INCLUDED IN THE UNIT PRICES BID FOR OTHER WATERLINE ITEMS.

5. WATERLINE WORK SHALL NOT BEGIN UNTIL THE AREAS OF CONSTRUCTION ARE ROUGH GRADED.

6. ALL WATERLINES ON THIS PROJECT SHALL BE LAID AT THE ELEVATIONS AND GRADES SHOWN ON THE DRAWINGS. HIGH POINTS IN THE WATERLINE MUST OCCUR AT THE STATIONED HYDRANT TEE LOCATIONS.

7. ALL HYDRANTS SHALL BE POSITIONED SO THAT THE STEAMER NOZZLES POINT IN THE DIRECTION SHOWN ON THE PLANS.

8. THE PROPOSED WATERLINE SHALL HAVE 5’ MINIMUM COVER OVER THE TOP OF PIPE AT ALL PLACES, EXCEPT AT SPECIFIC HYDRANT TEE LOCATIONS AS SHOWN ON THE PLANS.

9. ALL BOLTS SHALL BE STAINLESS STEEL TYPE 304 OR 316. WITH ANTI-GALLING AGENT.

10. ALL SHOP DRAWINGS SHALL BE SUBMITTED TO THE ENGINEER FOR PRELIMINARY CHECKING. THE ENGINEER SHALL FORWARD CHECKED SHOP DRAWINGS TO THE LCDU FOR FINAL CHECKING AND APPROVAL.

11. THE LCDU SHALL PROVIDE WATER FOR THE NEW WATER MAIN WITHOUT COST FOR THE INITIAL OPERATION. ALL WATER FOR FLUSHING OPERATIONS SHALL BE PAID FOR BY THE CONTRACTOR AT CURRENT RATES AS ESTABLISHED BY THE LAKE COUNTY BOARD OF COMMISSIONERS PER 100 CUBIC FEET OF WATER USED. (SEE SECTION 7 FEE SCHEDULE)

12. ALL WATER MAIN PIPE SHALL BE DUCTILE IRON PIPE, ANSI A21.51, THICKNESS CLASS 53, UNLESS OTHERWISE SHOWN ON THE PLANS, WITH PUSH-ON JOINTS, CEMENT LINED ANSI A 21.4. FITTINGS TO BE FULL BODY-ONLY.

13. LOCATION OF STERILIZATION AND TESTING CONNECTIONS SHALL BE AS DIRECTED BY THE LCDU AND ALL COSTS ASSOCIATED WITH PLACING AND UTILIZING SAID STERILIZATION AND TESTING CONNECTIONS SHALL BE INCLUDED IN THE PRICE BID PER LINEAL FOOT OF THE WATER MAINS. NO BACTERIA SAMPLES ARE TO BE TAKEN FROM FIRE HYDRANTS.

14. LCDU WILL MAKE THE NECESSARY NEW SERVICE CONNECTION TAPS ON EXISTING LCDU MAINS FOR THE CONTRACTOR AT CURRENT RATES AS ESTABLISHED BY THE LAKE COUNTY BOARD OF COMMISSIONERS PER 8” AND GREATER TAPS WITHIN RIGHT OF WAY. (SEE SECTION 7 FEE SCHEDULE) SERVICE CONNECTIONS TO EXISTING BUILDINGS SHALL BE MADE BY THE CONTRACTOR.

15. NO WATER SERVICE CONNECTIONS TO ANY BUILDING SHALL BE PERMITTED PRIOR TO FINAL ACCEPTANCE BY THE LCDU INCLUDING RECTIFICATION OF ALL PUNCH LIST ITEMS.

16. ALL CURB STOP BOXES, VALVE BOXES, ETC. TO BE SET AS SHOWN ON THE PLANS. RIMS WILL BE RAISED OR LOWERED AND BOXES PLUMBED BY THE CONTRACTOR AT TIME OF HOUSE CONSTRUCTION WHEN FINAL YARD GRADING IS COMPLETED.

17. ALL PROJECT HYDRANTS SHALL HAVE A FIELD COAT OF APPROVED PAINT APPLIED BY THE CONTRACTOR WITH THE EXCEPTION OF HYDRANTS THAT ARE FACTORY PAINTED WITH A ONE COAT UV RESISTANT HIGH GLOSS 2-PART POLYURETHANE ENAMEL, COLOR AS SPECIFIED. IF THE COATING ON THE HYDRANT IS DAMAGED BEFORE INSTALLATION THE HYDRANT MUST BE PAINTED.

18. THE CONTRACTOR SHALL NOTIFY THE FIRE DEPARTMENT PRIOR TO ANY PRESSURE TESTING. FIRE DEPARTMENT SHALL WITNESS ANY PRESSURE TESTING.

19. ALL PROPOSED WATER LINES SHALL BE LAID OUT BY A REGISTERED SURVEYOR WITH GRADE STAKES AT A MINIMUM OF EVERY 50’ AND AT ALL FITTINGS AND A CUT SHEET PROVIDED PRIOR TO CONSTRUCTION.

20. THE CONTRACTOR/DEVELOPER SHALL SUBMIT A THREE YEAR MAINTENANCE BOND TO THE COMMISSIONERS BY DEVELOPER IN THE AMOUNT OF TEN PERCENT OF THE FINAL CONSTRUCTION COSTS AS CERTIFIED BY THE DEVELOPER’S ENGINEER, FOR PUBLIC EXTENSION PROJECTS.

EXHIBIT B
GENERAL SANITARY SEWER NOTES
LAKE COUNTY DEPARTMENT OF UTILITIES

1. ALL SANITARY SEWER WORK COMPLETED MUST BE IN ACCORDANCE WITH THE CURRENT REGULATIONS AND RULES OF THE LAKE COUNTY DEPARTMENT OF UTILITIES (LCDU).

2. ONLY WATER/SEWER CONTRACTORS LICENSED BY THE LAKE COUNTY BOARD OF COMMISSIONERS MAY INSTALL SANITARY SEWERS.

3. CONSTRUCTION PLAN APPROVAL BY THE LCDU SHALL EXPIRE IF SANITARY SEWER CONSTRUCTION HAS NOT BEEN INITIATED BY A DEVELOPER WITHIN (12) MONTHS OF THE EFFECTIVE APPROVAL DATE AS SHOWN ON THE BLUEPRINT COPY ORIGINALLY SUBMITTED FOR APPROVAL (THIS IS NOT TO BE CONSTRUED AS THE DATE SHOWN ON THE ORIGINAL MYLAR TITLE SHEET).

4. ALL SANITARY SEWER CONNECTIONS SHALL BE A MINIMUM OF 6” DIAMETER AND SHALL HAVE PREMIUM JOINTS.

5. ALL SANITARY SEWERS MUST HAVE PREMIUM JOINTS, AND THE ENTIRE SYSTEM MUST PASS AN INFILTRATION TEST AND EXFILTRATION TEST AFTER CONSTRUCTION HAS BEEN COMPLETED. THE MAXIMUM ALLOWABLE RATE OF INFILTRATION AND EXFILTRATION SHALL BE 100 GALLONS PER INCH DIAMETER OF THE SEWER PER MILE PER DAY.

6. THE CONTRACTOR SHALL SCHEDULE INSPECTION AT LEAST 48 HOURS IN ADVANCE WITH THE LCDU.

7. NO SANITARY SEWER SERVICE CONNECTIONS TO ANY BUILDING SHALL BE PERMITTED PRIOR TO FINAL ACCEPTANCE BY THE LCDU WHICH SHALL INCLUDE APPROVED RECTIFICATION OF ALL PUNCH LIST ITEMS AND THE SUBMITTAL OF MYLAR AS-BUILT DRAWINGS.

8. ROOF DRAINS, FOUNDATION DRAINS AND OTHER CLEAN WATER CONNECTIONS TO THE SANITARY SYSTEM ARE PROHIBITED.

9. ALL SANITARY SEWER CONSTRUCTION AREAS MUST BE TO SUBGRADE PRIOR TO CONSTRUCTION AND CERTIFIED IN WRITING BY AN OHIO PROFESSIONAL SURVEYOR.

10. SHOP DRAWINGS ON ALL MATERIALS SHALL BE SUBMITTED TO THE LCDU FOR APPROVAL PRIOR TO INSTALLATION.

11. INSPECTION SERVICES SHALL BE PERFORMED BY THE LCDU. THE COST OF INSPECTION SHALL BE INCLUDED AS A PART OF THIS CONSTRUCTION PROJECT AT THE CURRENT BASE RATE AS ESTABLISHED BY THE LAKE COUNTY BOARD OF COMMISSIONERS. **(SEE SECTION 7 FEE SCHEDULE OF L.C.D.U. RULES AND REGULATIONS)** COST FOR INSPECTION SHALL BE THE SOLE RESPONSIBILITY OF THE LAKE COUNTY LICENSED WATER/SEWER CONTRACTOR.

12. FINAL TELEVISING OF A SANITARY SEWER SHALL BE PERFORMED BY A PACP CERTIFIED CREW IN ACCORDANCE WITH ALL APPLICABLE PROTOCOL OF THE NATIONAL ASSOCIATION OF SEWER SERVICE COMPANIES AND AS APPROVED BY THE LCDU. THE CCTV INSPECTION SHALL BE RECORDED TO DVD OR FLASH DRIVE

AS DIRECTED BY THE LCDU. THE LCDU SHALL RECEIVE THE TELEVISING DATABASE EXPORTED IN PACP VERSION 7.0 FORMAT FOR ALL TELEVISED INSPECTIONS. THE CONTRACTOR SHALL PAY ALL COSTS FOR INSPECTION.

13. ALL PROPOSED SANITARY SEWERS SHALL BE LAID OUT BY A REGISTERED SURVEYOR WITH GRADE STAKES AT A MINIMUM OF EVERY 50' AND AT ALL FITTINGS AND A CUT SHEET PROVIDED PRIOR TO CONSTRUCTION.

14. THE CONTRACTOR/DEVELOPER SHALL SUBMIT A THREE YEAR MAINTENANCE BOND TO THE COMMISSIONERS BY THE DEVELOPER IN THE AMOUNT OF TEN PERCENT OF THE FINAL CONSTRUCTION COSTS AS CERTIFIED BY THE DEVELOPERS ENGINEER, FOR PUBLIC EXTENSION PROJECTS.

EXHIBIT C
Lake County Department of Utilities
Water and Sanitary Sewer Service Connection Procedures

A. Residential, Outside Setting

1. Application for permit must be taken out and all fees paid to the Utilities Department (350-2652) prior to any work. NOTE: NEW PERMITS CANNOT HAVE AN INSPECTION THE FOLLOWING DAY.

2. The Department of Utilities recommends the homeowner or contractor call The Ohio Utilities Protection Service (1-800-362-2764) before installing the waterline to locate existing utilities.

3. The property owner or contractor will trench and install the line from the building to the road right-of-way, approximately 6' off the edge of pavement or between the sidewalk and the edge of the road where applicable. <u>The line must extend beyond existing underground utilities</u>. The location shall not interfere with hydrants, utility poles, driveways, decorative landscaping, etc. This is especially important when the existing water main is on the opposite side of the street. Copper must go under an existing utility if there is a conflict. The inspector on the job will have the final say if questions arise.

4. Copper pipe shall be type K only. Ductile iron pipe shall be class 53 minimum. Plastic pipe must be 160 psi minimum and must be copper size plastic. Line shall be 1" minimum in size. Glued joints are not permitted. All plastic lines must end with an adapter from plastic to copper and must have a #12 solid wire for a tracer wire installed above it from curb stop/meter vault to the main shut off in the building. The contractor must supply and connect the adapter, the tracer wire and a minimum 10' of type K copper extending a minimum 5' from meter vault. Meters will be outside settings for all plastic service lines and for services over 100' from the road.

5. The waterline must be 48" deep, in a separate trench and 5' away from any other utility. The trench must be 5' from any obstruction (driveway, telephone pole, etc.) and 10' from any building.

6. A copper pigtail must extend 1' above the ground in the right-of-way. All underground copper fittings shall be flared fitting type prior to the meter. Compression fitting type is acceptable after the meter for plastic and copper pipe services. A maximum of one in line fitting is allowed for setbacks of 100' and less.

7. If an existing curb box is located in the proposed driveway, it must be relocated outside the driveway.

8. Connections through building foundations must be sleeved.

9. The owner or contractor must call the Department of Utilities for inspection <u>prior</u> to backfilling the trench (350-2652). Inspections must be scheduled by noon the day before inspection is requested.

10. After the waterline is approved the Department of Utilities will make the tap and connect the waterline. This usually takes 10-15 working days. To verify if the tap has been complete call 440-350-2652.

11. Within 30 days, the resident must provide documentation from the Lake County Health Department that their well has been sealed or a reduced pressure backflow assembly must be installed and tested by a certified plumber. Failure to comply may result in termination of water service. Well must be disconnected from the house plumbing. There cannot be any cross connections with the public water supply.

12. Eastlake residential customers- Per an agreement with City of Eastlake, an Occupancy permit is required prior to having the water turned on.

13. The water will not be turned on until all procedures are followed, and The Lake County Department of Utilities receives a request to install a meter and turn the water on at the street. A $100 tampering fine will be levied against the property owner if the water is turned on by anyone other than the Utilities Department.

14. Attaching any ground wire or wires to any plumbing which is or may be connected to a service connection or main line belonging to the Lake County Utilities Department is forbidden.

15. All water service applications are governed by the most current Rules and Regulations governing water supply in Lake County, of which a complete copy can be obtained for a cost of $50.00.

B. Residential, Inside Setting:

1. Application for permit must be taken out and all fees paid to the Utilities Department (350-2652) prior to any work. NOTE: NEW PERMITS CANNOT HAVE AN INSPECTION THE FOLLOWING DAY.

2. The Department of Utilities recommends the homeowner or contractor call The Ohio Utilities Protection Service (1-800-362-2764) before installing the waterline to locate existing utilities.

3. The property owner or contractor will trench and install the line from the building to the road right-of-way, approximately 6' off the edge of pavement or between the sidewalk and the edge of the road where applicable. The line must extend beyond existing underground utilities. The location shall not interfere with hydrants, utility poles, driveways, decorative landscaping, etc. This is especially important when the existing water main is on the opposite side of the street. Copper must go under an existing utility if there is a conflict. The inspector on the job will have the final say if questions arise.

4. Copper pipe shall be type K only. Ductile iron pipe shall be class 53 minimum. Plastic pipe must be 160 psi minimum and must be copper size plastic. Line shall be 1" minimum in size. Glued joints are not permitted. All plastic lines must end with an adapter from plastic to copper and must have a # 12 solid wire for tracer wire installed above it from curb stop/meter vault to the main shut off in the building. The contractor must supply and connect the adapter and a minimum 10' of type K copper extending a minimum of 5' from meter vault or to curb stop. Meters will be outside settings for all plastic service lines, services which must be tapped and for services over 100' from the road.

5. The waterline must be 48" deep, in a separate trench and 5' away from any other utility. The trench must be 5' from any obstruction (driveway, telephone pole, etc.) and 10' from any building.

6. Curb stop depth shall be 4'.0" to 5'.0" from final grade. If grade changes prior to final connection of service line to pigtail or burb stop, the contractor will bring curb stop to a depth of 4'.0" to 5'.0" from final grade.

7. A copper pigtail must extend 1' above the ground in the right-of-way. All underground copper fittings shall be flared fitting type prior to the meter. Compression fitting type is acceptable after the meter for plastic pipe services. A maximum of one in line fitting is allowed for setbacks of 100' and less.

8. If an existing curb box is located in the proposed driveway, it must be relocated outside the driveway.

9. Connections through building foundations must be sleeved.

10. Inside connections require the owner or contractor to set the meter spread with valves on the upstream and downstream sides of the meter (1" meter = 16" spread).

11. All inside meter settings must be 2' above floor level in a horizontal position and in an accessible place for a meter reader or for a repair. A drain with sufficient capacity to carry off all water from a leaking meter or meter setting is recommended to prevent damage to property. The Lake County Utilities Department is not responsible for damages caused by water leaking from a meter or meter setting.

12. The owner or contractor must install a remote read wire- 18 gauge 2 strand (thermostat wire) from the meter to the outside of the building in order for the Utilities Department to set a remote read meter.

13. The owner or contractor must call the Department of Utilities for inspection prior to backfilling the trench (350-2652). Inspections must be scheduled by noon the day before inspection is requested.

14. Eastlake residential customers- Per an agreement with City of Eastlake, an Occupancy permit is required prior to having the water turned on.

15. The water will not be turned on until all procedures are followed, and The Lake County Department of Utilities receives a request to install a meter and turn the water on at the street. A $100 tampering fine will be levied against the property owner if the water is turned on by anyone other than the Utilities Department.

16. Attaching any ground wire or wires to any plumbing which is or may be connected to a service connection or main line belonging to the Lake County Utilities Department is forbidden.

17. All water service applications are governed by the most current Rules and Regulations governing water supply in Lake County, of which a complete copy can be obtained for a cost of $50.00.

C. Non Residential/Industrial Water Service Connection Procedures

1. Application for permit must be taken out and all fees paid to the Utilities Department (350-2652) prior to any work. NOTE: NEW PERMITS CANNOT HAVE AN INSPECTION THE FOLLOWING DAY.

2. The Department of Utilities recommends the owner or contractor call The Ohio Utilities Protection Service (1-800-362-2764) before installing the waterline to locate existing utilities.

3. The property owner or contractor will trench and install the line from the building to the road right-of-way, approximately 6' off the edge of pavement or between the sidewalk and the edge of the road where applicable. <u>The line must extend beyond existing underground utilities</u>. The location shall not interfere with hydrants, utility poles, driveways, decorative landscaping, etc. This is especially important when the existing water main is on the opposite side of the street. Copper must go under an existing utility if there is a conflict. The inspector on the job will have the final say if questions arise.

4. Copper pipe shall be type K only. Ductile iron pipe shall be class 53 minimum. Plastic pipe must be 160 psi minimum and must be copper size plastic. Glued joints are not permitted. All plastic lines must end with an adapter from plastic to copper and must have a # 12 solid wire for tracer wire installed above it from end to end. The contractor must supply and connect the adapter and a minimum 10' of type K copper. Meters will be outside settings for all plastic service lines, services which must be tapped and for services over 100' from the road.

5. The waterline must be 48" deep, in a separate trench and 5' away from any other utility. The trench must be 5' from any obstruction (driveway, telephone pole, etc.) and 10' from any building.

6. Curb stop depth shall be 4'.0" to 5'.0" from final grade. If grade changes prior to final connection of service line to pigtail or curb stop, the contractor will bring curb stop to a depth of 4'.0" to 5'.0" from final grade.

7. A copper pigtail must extend 3' above the ground in the right-of-way. All underground copper fittings shall be flared fitting type and plastic fittings shall be compression fitting type. A maximum of one in line fitting is allowed for setbacks of 100' and less.

8. If an existing curb box is located in the proposed driveway, it must be relocated outside the driveway.

9. Connections through building foundations must be sleeved.

10. Inside connections require the owner or contractor to set the meter spread with valves on the upstream and downstream sides of the meter (1" meter = 16' spread).

11. All inside meter settings must be 3' above floor level in a horizontal position and in an accessible place for a meter reader or for repair. All inside meter installations shall be so arranged that the meter connections shall be extended not less than eight (8) inches from the wall. A drain with sufficient capacity to carry off all water from a leaking meter or meter setting is recommended to prevent damage to property. The Lake County Utilities Department is not responsible for damages caused by water leaking from a meter or meter setting.

12. The owner or contractor must install a remote read wire - 18 gauge 2 strand (thermostat wire) from the meter to the outside of the building in order for the Utilities Department to set a remote read meter. The Utilities Department will specify the location of the remote read meter.

13. The owner or contractor must call the Department of Utilities for inspection <u>prior</u> to backfilling the trench (350-2652). Inspections must be scheduled by noon the day before inspection is requested.

14. After the waterline is approved the Department of Utilities will make the tap and connect the waterline. This usually takes 4-5 working days.

15. Prior to turn-on, the well must be disconnected from the building plumbing. There cannot be any cross connections with the public water supply.

16. Eastlake non residential l/Industrial customers- Per an agreement with City of Eastlake, an Occupancy permit is required prior to having the water turned on.

17. For all services regardless of size, other than single family residential, a site utility plan and profile prepared by an Ohio registered Professional Engineer and a set of building plans must be submitted for approval and calculation of fees. Fire Department approval is required on all plan submittals.

18. For services of 2" or greater, contractor provides the following:
    a. All piping and appurtenances from the corporation stop to the building including all meters, except 2-inch meters.
    b. All excavation and backfilling
    c. Restoration to original condition
    d. Road crossings (open cut, bore or push)
    e. Tapping sleeve and valve or cut-in tee for 4" services and greater
    f. A valve and box in the right-of-way before and independent of the meter assembly
    g. A 1 ½" meter will be required on a 2" service when specified by the Utilities Department's plan review.

19. 2" and larger taps must be scheduled with West End Service Center (440-918-3416) a minimum of 48 hours in advance.

20. Commercial/Industrial meters may be set inside if less than 100' setback from service right-of-way line.

21. Commercial/Industrial applicants must complete a Department of Utilities issued backflow/cross connection questionnaire. NOTE: water service will not be turned on until the form is complete and the specified backflow device is installed and approved by the Department of Utilities.

22. The water will not be turned on until all procedures are followed, and The Lake County Department of Utilities receives a request to install a meter and turn the water on at the street. A $100 tampering fine will be levied against the property owner if the water is turned on by anyone other than the Utilities Department.

23. Attaching any ground wire or wires to any plumbing which is or may be connected to a service connection or main line belonging to the Lake County Utilities Department is forbidden.

24. All water service applications are governed by the most current Rules and Regulations governing water supply in Lake County, of which a complete copy can be obtained for a cost of $50.00.

D. Residential Gravity Sanitary Sewer Service Connection Procedures

1. Application for permit must be taken out and all fees paid to Utilities Department (350-2652) prior to any work. A permit will not be issued until the rough plumbing has been approved by the building department and the floor slab is poured or the roof is on the building.

2. The Department of Utilities recommends the homeowner or contractor call The Ohio Utilities Protection Service (1-800-362-2764) before installing the sanitary sewer, to locate existing utilities.

3. The contractor will trench and install the line from the sewer main or lateral connection to the building. The location shall not interfere with hydrants, utility poles, driveways, decorative landscaping, etc. This is especially important when the existing sanitary sewer main is on the opposite side of the street. The inspector on the job will have the final say if questions arise.

4. Vitrified clay pipe shall meet the requirements of ASTM C-700 E.S.; ductile iron pipe shall be class 52 minimum; plastic pipe must be SDR-26 minimum. Glued joints are not permitted for gravity sewer construction. Minimum pipe size is 6-inch at 1% slope to within 5' of the building.

5. The sanitary sewer must be in a separate trench and 5' away from any other utility. The trench must be 5' from any obstruction (driveway, telephone pole, etc.) and 10' from any building.

6. Lateral Inspection port is required on new installations.

7. Test tees shall be field located as directed by the inspector.

8. All sanitary sewer service applications are governed by the most current Utilities Department Rules and Regulations, which can be viewed on the internet or a complete copy can be obtained for a cost of $50.00.

E. Non Residential/Industrial Gravity Sanitary Sewer Service Connection Procedures

1. Application for a permit must be taken out and all fees paid to the Utilities Department (350-2652) prior to any work. A permit will not be issued until the rough plumbing has been approved by the building department and the floor slab is poured or the roof is on the building.

2. The Department of Utilities recommends the owner or the contractor call the Ohio Utilities Protection Service (1-800-362-2764) before installing the sanitary sewer to locate existing utilities.

3. The contractor will trench and install the line from the sewer main or lateral connection to the building. The location shall not interfere with hydrants, utility poles, driveways, decorative landscaping, etc. This is especially important when the existing sanitary sewer main is on the opposite side of the street. The inspector on the job will have the final say if questions arise.

4. Vitrified clay pipe shall meet the requirements of ASTM C-700 E.S. Ductile iron pipe shall be class 52 minimum. PVC pipe shall be SDR 26 gasketed. Minimum pipe size is 6-inch at 1% slope to within 5" of the building.

5. The sanitary sewer must be in a separate trench and 5' away from any other utility. The trench must be 5' from any obstruction (driveway, telephone pole, etc.) and 10' from any building.

6. Install a manhole where access to the sewer line is needed for maintenance purposes.

7. Test tees shall be field located as directed by the inspector.

8. All sanitary sewer service applications are governed by the most current Utilities Department Rules and Regulations, which can be viewed on the internet or a complete copy can be obtained for a cost of $50.00.

EXHIBIT D

AGREEMENT GOVERNING
NONRESIDENTIAL SANITARY LATERAL EXTENSION PRIOR TO FINAL CONNECTION

1. Written request must be submitted to LCDU for approval. Request must state reason of necessity for lateral extension.

2. Approval must be granted by the Lake County Sanitary Engineer prior to the lateral extension.

3. All tap-in fees and inspection fees (including the additional inspection fee to complete the final connection) must be paid prior to the approval of a lateral extension.

4. A cash deposit of $500.00 must be posted. This deposit is a guarantee that the licensed Sewer Builder who installed the lateral extension is also responsible to complete the final connection after the first rough waste plumbing is installed and inspected. A copy of the first rough plumbing approval tag must be submitted to this office prior to final connection. THE FINAL CONNECTION MUST BE PERFORMED BY THE LICENSED SEWER BUILDER WITH A LAKE COUNTY UTILITIES DEPT. INSPECTOR PRESENT. Contractor is required to follow normal inspection scheduling procedures.

   Failure to comply with lateral extension regulations will result in the forfeiture of the $500.00 deposit, and the contractor will be required to expose all pipe installed without an inspector and relay the connection. Sewer service charges will begin from the date of lateral extension. The Sewer Builder agrees to have his license suspended and/or revoked for noncompliance of Lake County Rules and Regulations.

   The Sewer Builder and Developer/Property Owner further agree that noncompliance shall result in no future issuance of any lateral extension permits.

   The $500.00 deposit will be refunded if all procedures are followed and all required inspections have been obtained.

   The final connection to the proposed building must be made within 120 days of inspection of the lateral extension. The entire lateral will be tested when the final connection is made. If construction of the final permitted lateral is not made within the 120 day period, LCDU will inspect the project site on a weekly basis until the final connection is made. The property owner will be required to pay these additional inspection costs.

_____
Contractor

_____
Witness

_____
Witness

Approved by:

_____
Randall J. Rothlisberger, P.E.
Lake County Sanitary Engineer

Date_____

_____
Property Owner

_____
Witness

_____
Witness

Sanitary Permit No. _____

Address For Lateral Extension:

_____

Sub lot #_____ PP #_____

Date_____

EXHIBIT E
APPLICATION FOR USE OF "OR-EQUAL" ITEM

TO: _____

PROJECT: _____

SPECIFIED ITEM:

_____	_____	_____
Page	Paragraph	Description

A. The undersigned requests consideration of the following as an “or-equal” item in accordance with Section 1.08 of these Rules and Regulations.

_____

B. Change in Contract Price (indicate + or -) $ _____

C. Attached data includes product description, specifications, drawings, photographs, references, past problems and remedies, and performance and test data adequate for evaluation of the request; applicable portions of the data are clearly identified. For consideration of the attached data as SHOP DRAWINGS, submittal shall be in accordance with the requirements of Section 1.08 of these Rules and Regulations.

D. Signature: _____

Firm: _____

Address: _____

_____

Telephone: _____ Date: _____

Attachments: _____

_____

_____

_____

For use by LAKE COUNTY DEPARTMENT OF UTILITIES:

_____ Accepted as evidenced by affixed SHOP DRAWING REVIEW stamp.
_____ Accepted as evidenced by included CHANGE ORDER.
_____ Not accepted as submitted. See Remarks.
_____ Acceptance requires completion of submittal as required for SHOP DRAWINGS.
_____ Not accepted. Do not resubmit.

By: _____ Date: _____

Remarks: _____

_____

_____

_____

_____

_____

_____

_____

_____

EXHIBIT F
APPLICATION FOR USE OF SUBSTITUTE ITEM

TO: _____

PROJECT: _____

SPECIFIED ITEM:

_____	_____	_____
Page	Paragraph	Description

A. The undersigned requests consideration of the following as a substitute item in accordance with Section 1.08 of these Rules and Regulations

_____

B. Change in Contract Price (indicate + or -) $ _____

C. Attached data includes product description, specifications, drawings, photographs, references, past problems and remedies, and performance and test data adequate for evaluation of the request; applicable portions of the data are clearly identified. For consideration of the attached data as SHOP DRAWINGS, submittal shall be in accordance with the requirements of Section 1.08 of these Rules and Regulations

D. Attached data also includes a description of changes to the Contract Documents that the proposed substitution will require for its proper installation.

The undersigned certifies that the following paragraphs, unless modified by attachments are correct:

1. The proposed substitute does not affect dimensions shown on Drawings.

2. The undersigned will pay for changes to the building design, including engineering design, detailing, and construction costs caused by the requested substitution.

3. The proposed substitution will have no adverse affect on other contractors, the construction schedule, or specified warranty requirements. (If proposed substitution affects construction schedule, indicate below using + or -.)

   _____ CONSECUTIVE CALENDAR DAYS

4. Maintenance and service parts will be locally available for the proposed substitution.

The undersigned further states that the function, appearance, and quality of the proposed substitution are equivalent or superior to the specified item, and agrees to reimburse the OWNER for the charges of the ENGINEER for evaluating this proposed substitute item.

E. Signature: _____

Firm: _____

Address: _____

_____

Telephone: _____ Date: _____

Attachments: _____

_____

_____

_____

For use by LAKE COUNTY DEPARTMENT OF UTILITIES:

_____ Accepted as evidenced by affixed SHOP DRAWING REVIEW stamp.
_____ Accepted as evidenced by included CHANGE ORDER.
_____ Not accepted as submitted. See Remarks.
_____ Acceptance requires completion of submittal as required for SHOP DRAWINGS.
_____ Not accepted. Do not resubmit.

By: _____ Date: _____

Remarks: _____

_____

_____

_____

_____

_____

_____

_____

_____

_____

_____

_____

_____

_____

EXHIBIT G
RECORD DRAWINGS CONTENTS LIST

The following is a list of items to use when compiling record drawings. A general rule to follow when compiling record drawings is that any important deviations from original Drawings made during construction shall be noted on record drawings.

I. TITLE SHEET

A. Developer name and Address
   1. Project name, Address and City
B. Resident Project Representative
C. A bold note to indicate that the set of plans are “Record Drawings”, or “As-built drawings”
D. Surveyor’s Certification.

II. WATER AND FORCE MAIN CONSTRUCTION

A. Show unusual connections to existing mains in detail. (Schematic, where necessary).
B. Show correct horizontal alignment and grade, including centerline elevations for all mains installed to grade.
C. Show correct stationing of tees, bends (horizontal and vertical), valves, air release valves, blow-off chambers, curb box’s, pigtail lengths.
D. Show perpendicular distances from hydrant to water main and from hydrant to watch valve. If connection to water main is by a parallel or over the main tee, so indicate this on the record drawings.
E. Show correct beginning and ending stationing and type of encasement pipes. Note type of annular space fill material used.
F. For all valves, indicate the number of turns to open and indicate direction to open (clockwise or counter clockwise)

III. PAVEMENT CONSTRUCTION

A. Show correct top and invert elevations for catch basins, inlets, M.H.'s. installed where changes are greater than 0.25'.
B. Show corrected stationing and horizontal location dimension for all piping and structures.

IV. SEWER CONSTRUCTION

A. Show distance between manholes. (Center to center of M.H. lids to the nearest foot).
B. Show correct elevations for inverts and manhole tops (inverts to the nearest hundredth and tops to the nearest tenth).
C. Show correct stationing for manholes.
D. Show correct horizontal location dimension for sewers.
E. Show references for all service connections as follows:
   1. Distance of wye to downstream M.H.
   2. Horizontal distance of service connection end to downstream M.H.
   3. Perpendicular distance from main to service connection.
   4. Elevation of service connection invert.
   5. Sewer stationing and offsets.
   6. Depth at main in feet.
F. Show correct beginning and ending stationing and type of encasement pipes. Note type of annular space fill material used.

G. Show Size, class and type of pipe.

H. Buried or concealed materials used on project, for example: bends, tees, fittings, couplings etc.

V. BUILDING/STRUCTURE CONSTRUCTION

A. Show changes in location of fences, buildings and permanent benchmark elevations.
B. Show changes in building dimensions greater than 3 inches and note changes in construction materials.
C. Add notes on Drawings to refer to Shop Drawings where possible to identify changes in structural steel, etc.
D. Show major changes in location of equipment. Add notes on Drawings to refer to Shop Drawings for detail changes in equipment.
E. Show changes in schematics.
F. Show major changes in grading plan.
G. For yard piping, show changes in location, material, elevation and size. Indicate the type of piping support in excavated areas. For manholes and catch basins, show changes in location and elevation.

VI. ELECTRICAL WORK

A. Revise the following on record drawings:
1. Accurately record final routing of all ductbanks, manholes and handhole locations including dimensions from buildings or other fixed objects as reference points.
2. Overhead circuits and pole line locations as applicable.
3. Show actual locations of grounding electrodes.
4. Show all panels, control stations, load centers, etc., locations.
5. Revise motor control center elevation views as required.
6. Show branch circuit arrangements on a typed legend for panelboards provided under this Project. Correct existing field legends where modifications are made to existing panelboards.
7. Revise control schematics to reflect final electrical identification for wire numbers, terminal numbers, components, etc.
8. Revise one-line diagram as required.
9. Revise process and instrumentation diagrams (P&ID), if applicable.
B. Revise the following shop drawing submittals to indicate as-built conditions:
1. Layout drawings.
2. Motor control centers.
3. Variable frequency controllers.
4. Instrumentation systems.
5. Control panels.

VII. PLUMBING

A. Show changes in schematics.
B. Show changes in location, size and materials.
C. Show major changes in location of equipment.
D. Reference Shop Drawings using notes on record drawings when needed to determine construction details. Provide reproducible copies of erection drawings prepared by CONTRACTOR or suppliers.
E. Update detail sheets with details actually used. Add and delete details to reflect actual details utilized.
F. For underground items, provide record drawings with information required in Items II, IV, V, IX.

VIII. HEATING, VENTILATING AND AIR CONDITIONING

A. Show changes in schematics.
B. Show changes in location, size and materials for ductwork and piping.
C. Show major changes in location and dimensions of equipment.

D. Reference Shop Drawings using notes on record drawings when needed to determine construction details. Provide reproducible copies of control drawings and erection drawings prepared by CONTRACTOR or suppliers.

E. Update detail sheets with details actually used. Add and delete details to reflect actual details utilized.

F. For underground items, provide record drawings with information required in Items II, IV, V, IX.

IX. DETAIL SHEETS

A. Any details not used or not applicable shall be so noted. Example - If three alternates for pavement are on detail sheet, the two not used shall be so noted. (Box and cross out unused details).

X. ALL CONSTRUCTION (WATER MAIN, FORCE MAIN, PAVEMENT, SEWER AND BUILDING)

A. Denote any area where any existing utility was repaired, replaced or relocated. Show correct location if plan location was incorrect.

B. Note and accurately locate all existing underground utilities encountered during construction, whether shown on the Drawings or not.

XI. SUBMITTAL FORMAT

A. A digital copy of the Record Drawings shall be submitted to the Lake County Department of Utilities. The information shall be in State Plane Coordinates, North Zone, NAD83, or latest coordinate version.

B. The information submitted shall be in accordance with the Elevation Datum established by Lake County.

AFFIDAVIT
FOR RECORD DRAWINGS

STATE OF OHIO)
) SS: AFFIDAVIT OF _____
COUNTY OF LAKE) (CONTRACTOR)

_____, the CONTRACTOR on _____
(Contractor) (Project title per Contract Documents)

_____, hereby certifies that the enclosed record drawings show all changes made during construction, as specified herein.

By: _____
CONTRACTOR (Authorized Signature)

_____

Sworn to and subscribed before me this _____ day of _____, _____.

_____
NOTARY PUBLIC

EXHIBIT H
MANUFACTURER'S SERVICE REPRESENTATIVE'S REPORT

Project _____ CONTRACTOR _____

Name and address of Manufacturer _____

_____ Phone No. _____

* Name of Representative _____

Address to Contact _____ Phone No. _____

Items covered by Inspection _____

_____

Contractor's Representative Present _____

Owner's Representative Present _____

Date or Dates of Inspection _____

Time of Day _____ (Inspection Started) _____ (Inspection Completed)

Were Manufacturer's Drawings, Operation Instructions and Spare Parts Lists on the job at or prior to Inspection?

_____ yes _____ no. If answer is no, list deficiencies.

_____

** Description of operation accomplished under supervision of Manufacturer's Representative or problems encountered _____

_____

_____

_____

** Recommendations made by Manufacturer's Representative _____

_____

_____

_____

Manufacturer's Representative's Signature _____

Is a return visit recommended or needed? _____ yes _____ no

If so, how soon? _____

Instruct Plant Personnel in operation and maintenance of equipment? _____ yes _____ no

_____

Contractor's Representative (Authorized Signature)

_____

OWNER (Authorized Signature)

* Attach company or representative's card

** Use second sheet if additional space required.

EXHIBIT J

SCHEDULE OF RATES OF FLOW, QUANTITY AND ACCURACY LIMITS OF VARIOUS SIZES
AND STYLES OF METERS TO BE USED WHEN TESTING A METER BY REQUEST

	MAXIMUM RATE			INTERMEDIATE RATE			LOW RATE		
SIZE	RATE OF FLOW, GPM	TEST QTY., CU. FT.	ACCURACY LIMITS, %	RATE OF FLOW, GPM	TEST QTY., CU. FT.	ACCURACY LIMITS, %	RATE OF FLOW, GPM	TEST QTY., CU. FT.	ACCURACY LIMITS, %
POSITIVE DISPLACEMENT									
5/8"	15	10	98-102	2	10	98-102	1/4	1	90 or better
3/4"	25	10	98-102	3	10	98-102	1/2	1	90 or better
1"	40	10	98-102	4	10	98-102	3/4	1	90 or better
COMPOUND METERS									
2"	120	100	97-103	20	10	97-103	1/4	1	90 or better
3"	250	100	97-103	30	10	97-103	1/2	1	90 or better
4"	350	1000	97-103	50	100	97-103	3/4	1	90 or better
6"	700	1000	97-103	100	100	97-103	1 1/2	10	90 or better
8"	1200	1000	97-103	200	1000	97-103	2	10	90 or better
10"	1600	1000	97-103	300	1000	97-103	4	10	90 or better

EXHIBIT K

ACCURACY OF METERS

New Meters installed by the Division of Water shall meet the following accuracy specifications:

POSITIVE DISPLACEMENT METERS

SIZE	RATE OF FLOW, GPM	ACCURACY LIMITS, %	RATE OF FLOW, GPM	ACCURACY LIMITS, %
5/8"	1-20	99-101	1/4	95% or better
3/4"	2-34	99-101	1/4	95% or better
1"	3-53	99-101	3/4	95% or better
			1/8	90% or better

COMPOUND METERS

SIZE	RATE OF FLOW, GPM	ACCURACY LIMITS, %	RATE OF FLOW, GPM	ACCURACY LIMITS, %
2"	2-160	98-102	1/2	95% or better
3"	4-315	98-102	1	95% or better
4"	6-500	98-102	1 1/2	95% or better
6"	10-1000	98-102	3	95% or better
8"	16-1600	98-102	4	95% or better
10"	32-2300	98-102	8	95% or better

At the cross-over point, accuracy of 97% to 103% is required.

The accuracy of repaired meters shall be as follows:

POSITIVE DISPLACEMENT METERS

SIZE	RATE OF FLOW, GPM	ACCURACY LIMITS, %	RATE OF FLOW, GPM	ACCURACY LIMITS, %
5/8"	1-20	98-102	1/4	90% or better
3/4"	2-34	98-102	1/4	90% or better
1"	3-53	98-102	3/4	90% or better

COMPOUND METERS

SIZE	RATE OF FLOW, GPM	ACCURACY LIMITS, %	RATE OF FLOW, GPM	ACCURACY LIMITS, %
2"	2-160	97-103	1/2	90% or better
3"	4-315	97-103	1	90% or better
4"	6-500	97-103	1 1/2	90% or better
6"	10-1000	97-103	3	90% or better
8"	16-1600	97-103	4	90% or better
10"	32-2300	97-103	8	90% or better

EXHIBIT L

LICENSING FORM-APPLICATION

LICENSING FORM
APPLICATION FOR SEWER AND WATER BUILDERS LICENSE
COUNTY OF LAKE
DEPARTMENT OF UTILITIES

DATE_____

_____, a corporation or partnership or individual, hereby applies to the Lake County Board of Commissioners for a SEWER AND WATER BUILDER=S LICENSE, for the purpose of constructing all sanitary sewer mains, water mains and appurtenances thereto in all Lake County Sewer and Water Districts in accordance with the regulations and specifications of the Department of Utilities. Failure by the sewer and water builder to answer any of the following questions or supply the information requested to the satisfaction of the Sanitary Engineer or to comply with any rules and regulations or the direct orders of the Sanitary Engineer or his duly authorized assistants or inspectors shall be deemed just cause for the non-issuance and/or revocation of the Sewer and Water Builder=s License and may lead to legal prosecution in accordance with Section 6117 and 6103 of the Ohio Revised Code.

1. Business Address _____

_____

2. Home Address _____

_____

3. Telephone _____ _____
Business Home

If business & home phones are the same, is the phone answered on a 24hr/day 7day/ week basis? Yes_____ No_____

SAMPLE
Contact LCDU For Blank Forms

4. List names of principals and/or partners of your company.

President _____

Vice- President _____

Secretary _____

Treasurer _____

Partners (if any) _____

5. Employer Tax Identification Number _____

6. Is your firm incorporated in the State of Ohio?

Yes_____ No_____

If yes, your State of Ohio Charter No. is _____
Year Incorporated_____

7. Is your firm a Limited Liability Corporation? Yes _____ No_____

8. Number of years licensed by the Lake County Department of Utilities_____

9. Years of experience constructing sanitary sewer mains, water mains, and appurtenances: _____ years.

10. Percentage of work concerned with constructing sanitary sewer mains, water mains and appurtenances: _____%

11. Other types of work engaged in and percentage of total work which each is.

_____ _____%

_____ _____%

12. Bank and Business References: (list two of each)

Bank #1 _____ Bank #2 _____

Acct #1 _____ Acct #2 _____

Address _____ Address _____

_____ _____

Business #1_____ Business #2_____

Address _____ Address _____

_____ _____

13. Cities, Villages or Townships in which Applicant has performed work during previous two years and the official, preferably an engineer, having personal knowledge of Applicant=s workmanship and character.

SAMPLE
Contact LCDU For Blank Forms

MUNICIPALITY	CONTACT PERSON	TITLE	PHONE NUMBER	TYPE OF WORK	QUANTITY* OF WORK

14. Cities, Villages or Townships in which Applicant contemplates work as a Sewer and Water Builder, licensed by Lake County, during the year for which the license has been applied for.

_____

_____

_____

*QUANTITY OF WORK SHALL BE IN DOLLARS OR FEET OF PIPE WITH THE UNITS SHOWN.

15. Equipment which applicant owns.

Equipment Type	Manufacturer	Model	Serial Number

16. If the applicant does not own excavating equipment, the name and address of his/her usual excavating subcontractor and the equipment he owns with serial numbers. <u>If applicant uses a subcontractor, insurance must state applicant=s coverage limits which include protection of that particular subcontractor.</u>

Subcontractor _____ **Phone** _____

Address _____

Equipment Type	Manufacturer	Model	Serial Number

SAMPLE
Contact LCDU For Blank Forms

17. The names and addresses of applicant's employees to be employed for purposes of this license. Attach additional sheets, if necessary.

Name(s):	Address:

18. The applicant agrees to abide by current Lake County department of Utilities Rules and Regulations.

Yes_____ **No**_____

19. Will the applicant or his duly authorized representative be present during the performance of work under his license?

Yes_____ **No**_____

20. Foreman who will be in charge of work under this license.

_____

21. Will you provide proper affidavits to the property owner (if requested) that all labor and material costs incurred doing the Owner's work have been paid prior to receiving payment from the owner?

Yes_____ **No**_____

22. List all the company shareholders/stockholders. Attach a separate list if necessary.

_____

_____

_____

_____

_____

SAMPLE
Contact LCDU For Blank Forms

Signed:_____
Contractor

VERIFICATION

_____, being first duly sworn, says that he is the officer or person duly authorized to execute the foregoing application, and that the statements made and answers given therein, written or printed, are true as he verily believes.

SIGNED:_____
Contractor

Sworn to and subscribed in my presence this _____day of _____, _____, at _____, County of _____, and State of_____.

Notary Public _____

My Commission Expires _____

SAMPLE
Contact LCDU For Blank Forms

APPLICATION APPROVED:

By:_____
Albert J. Saari, P.E.
Lake County Sanitary Engineer

Date:_____

_____
Commissioner
Date:_____

_____
Commissioner
Date:_____

By:_____
Robert Gambol
Lake County Assistant
Prosecuting Attorney

Date:_____

_____
Commissioner
Date:_____

LICENSING FORM

LAKE COUNTY DEPARTMENT OF UTILITIES
SEWER AND WATER BUILDER'S LICENSE
AFFIDAVIT

I hereby certify that all outstanding bills for labor and material for the previous years have been paid in full. I further hereby certify that all outstanding Lake County property taxes, personal property taxes, my Department of Utilities bills and any other bills from any department or office of Lake County for all previous years have been paid in full. It is further agreed that my license will not be issued if any of the above items are outstanding relative to any previous company, incorporation, partnership, individual, etc., with which I was associated or with whom I am now associated. And it is further agreed that I am not/nor is any shareholder, partner, person with ownership interest, employee or worker or worker who has held a license in the past, currently in less than good standing with Lake County and its departments. I further agree that a separate Lake County Department of Utilities sewer and water installation permit shall be required on all main lines to be constructed in the public right-of-way and/or a Lake County dedicated easement. The amount of the performance/maintenance surety required to be submitted with said permit shall be solely determined by the Lake County Sanitary Engineer. I also agree that all inspection deposits shall be kept current and shall not fall in arrears. Failure to meet any requirement listed above or violation of any of the above requirements or of any applicable sewer or water rule or regulation shall be cause to deny the issuance or revocation of any license. The names and signatures listed below attest and agree with said denial and/or immediate revocation of an existing Lake County Department of Utilities Sewer and Water Builder's License for failure to meet any of the above requirements or violation of any of the above requirements or of any applicable sewer or water rule or regulation.

SAMPLE
Contact LCDU For Blank Forms

_____
Company Name (if applicable)

_____
Individual (if applicable)

_____
President (if applicable)

_____
Partner (if applicable)

_____
Vice-President (if applicable)

_____
Partner (if applicable)

_____
Secretary (if applicable)

_____
Partner (if applicable)

_____
Treasure (if applicable)

Sworn to and subscribed before me, a notary public, this _____ day of

_____, _____, at the City of _____,

County of _____, State of Ohio.

_____
Notary Public

My Commission Expires_____

LICENSING FORM **BOND NO. _____**

LAKE COUNTY DEPARTMENT OF UTILITIES
SEWER AND WATER BUILDER'S LICENSE
BOND

KNOW ALL MEN BY THESE PRESENTS: That _____ _____,as principal , and we, _____, as Surety, are held and firmly bound unto the County of Lake, State of Ohio, in the sum of Ten Thousand Dollars ($10,000) good and lawful money of the United States, to be paid to the County of Lake, for which payment well and truly made, we bind ourselves, our heirs, executors and administrators, successors and assigns jointly and severally, firmly be these presents, for a term beginning _____ and ending December 31, 20____.

WHEREAS, said _____, Principal, has this day been granted a sewer and water builders license as dated by the County Commissioners of Lake County in accordance with the provisions and under the terms and conditions set forth in Section 1.05, et seq. of the Rules and Regulations governing sanitary sewerage in Lake County, duly adopted by the County Commissioners of Lake County, Ohio and by the conditions set forth in this application package.

NOW, THEREFORE, the condition of this obligation is such that the said _____, Principal, shall at all times hereafter under said license, well and truly perform and discharge the duties imposed upon him by said Rules and Regulations or any amendment thereto, and shall save said County harmless from all damages that may arise from his negligence, or the negligence of any one in his employ including the failure to fully restore property in kind, and shall conform to and abide by THE OHIO SANITARY CODE OF THE STATE OF OHIO DEPARTMENT OF HEALTH AND OF THE PUBLIC HEALTH COUNCIL OF OHIO AND ALL REGULATIONS ISSUED THEREUNDER as provided by OHIO REVISED CODE, TITLE 37 and such other requirements as said County may make in relation to plumbing and to the direction of the Sanitary Engineer for said County, then this obligation is to be void, otherwise in full force and effect.

SAMPLE
Contact LCDU For Blank Forms

Signed, sealed and dated this _____ day of _____, _____.

Board of County Commissioners
of the County of Lake, State of Ohio

_____ _____
Commissioner **Contractor's Signature**

_____ _____
Commissioner **Company Name**

_____ _____
Commissioner **Surety Company Name**

_____
Agent's Signature

Date: _____ **Date:_____**

APPROVED AS TO FORM:

By: _____
Albert J. Saari, P.E.
Lake County Sanitary Engineer
Date:_____

By:_____
Robert Gambol, Lake County
Assistant Prosecuting Attorney
Date:_____

Exhibit M

LAKE COUNTY DEPARTMENT OF UTILITIES
SECTION 1.01(E) APPEALS BOARD

RULES OF PROCEDURE

AUTHORITY: The Appeals Board and these Rules of Procedure governing conduct of hearings of the Appeals Board are authorized by Section 1.01(E) of the Lake County Department of Utilities Rules and Regulations initially adopted by the Board of Lake County Commissioners by resolution dated August 14, 2003 and as further amended by subsequent resolutions.

DUTIES OF THE BOARD: The Board shall meet and decide appeals where it is alleged there is error in any order, requirement, decision or determination made by an administrative official in the enforcement of the LCDU Rules and Regulations**.**

APPOINTMENT AND TERMS OF BOARD MEMBERS: Board members shall be appointed by of the Lake County Department of Utilities. The term of each member shall be five (5) years, beginning January 1st, except that the terms of the original members shall be of such length and so arranged that the term of one (1) member will expire each year. Each member shall serve until his successor is appointed and qualified. Vacancies shall be filled by the Lake County Department of Utilities and shall be for unexpired terms.

ANNUAL MEETING AND ELECTION OF CHAIR: A meeting shall be held in January of each calendar year that shall constitute the organizational meeting of the Board. At the organizational meeting each year, the Board shall elect from among its members the following officers who may serve for consecutive terms: Chair and Vice-Chair. The Chair shall preside at all appeals hearings in accordance with these Rules. The Vice-Chair shall preside in the absence of the Chair and assume the Chair's duties.

RECORDING SECRETARY: A recording secretary who is an employee of the Lake County Department of Utilities shall keep all records, conduct all correspondence of the Board and supervise all clerical work for the Board. The secretary shall also take and record minutes of the Board and keep a minute book of the proceedings of each meeting which shall include the vote of each member on each question or if absent or failing to vote, indicating such fact; the names and addresses of all witnesses; a summary of the facts on which the decision is based and the decision rendered; any other official actions of the Board. The secretary shall not be a member of the Board and shall not have a right to vote.

REGULAR MEETINGS: Regular meetings shall be scheduled by the Chair as required to hear all appeals in a timely manner. Insofar as is possible, the schedules of the Board members shall be taken into account in scheduling hearings.

A meeting agenda shall be mailed or delivered to the Board members at least three days prior to any meeting date. Failure of a quorum will result in a continuation of the meeting and any appeals hearings scheduled.

The order of business for all regular meetings shall be:

A. Roll call
B. Approval of minutes
C. Other business
D. Action on tabled cases
E. Hearings
F. Action on new cases
G. Adjournment

CONDUCT OF HEARINGS:

1. Quorum: A quorum shall consist of four (4) members of the Board. All Board members are entitled to vote unless otherwise disqualified. See paragraph 11, below.

2. Schedule of Hearings: (a) Complainants shall be given at least __ten__ (_10_) days prior written notice of hearings.
(b) All appeals shall be set for hearing taking into consideration the amount of time estimated necessary to hear the case and other matters on the agenda.
(c) The Board may set special hearing dates in addition to regular hearing dates.
(d) Requests by the complainant for continuances of the hearing must be made in writing and received by the recording secretary at least _seven_ (_7_) days prior to the scheduled date of the hearing.

3. Merits Hearing: Each hearing shall be considered a hearing on the merits of the complaint. Each party will be given up to 20 minutes to present its case.

4. Burden of Proof: The complainant shall have the burden of proof and be required to go forward with evidence in support of its claim of error.

5. Evidence: All evidence shall be taken in the presence of the Board, however, the absence of any Board member for a part of the hearing of evidence shall not disqualify said member from voting on the appeal. The Chair shall be the sole determiner of whether Board members who are absent for a part of the hearing of evidence shall vote.

6. Duties of the Chair: (a) The Chair shall be the sole determiner of the relevancy and materiality of the evidence and the competency of witnesses and may rule accordingly. Strict conformity to the legal rules of evidence will not be required of either party.
(b) The Chair may admit evidence of witnesses by affidavit or written report and the Board shall give it such weight as the Board deems it is entitled to after consideration of any objections made to its admission.
(c) The Chair may administer oaths or affirmations to all witnesses at the request of the complainant or the Board.

7. Continuation of hearing: Upon request by a member of the Board by a “Motion to table” or upon request by the complainant, the Board may continue the hearing of the appeal from date to date after the appeal hearing has convened.

8. Rights of the parties: Complainant and LCDU each shall have the right and authority:
(a) To present its position, arguments and contentions;
(b) To offer and examine witnesses and present evidence in support thereof;
(c) To cross examine witnesses purporting to refute either’s position, arguments or contentions;
(d) To offer evidence, to refute evidence and testimony offered in opposition to its position, arguments or contentions;
(e) To proffer any such evidence into the record if the admission thereof is denied by the Chair.

9. Consultants: In the event that the Board determines that it requires a report or testimony from a consultant, it shall notify the party of whom the report is being required of the cost thereof as soon as possible. The party shall deposit the cost thereof with the recording secretary before the Board continues to hear the case. If the report is being required of the complainant, failure to deposit the cost within the time required by the Board shall result in an automatic dismissal of the appeal.

10. Transcripts: If the complainant or Board desires a transcript, the party desiring one may provide a court reporter and cause a record to be made. The party desiring a transcript shall pay the cost thereof. Any party desiring a copy of any transcript shall be provided with it by the court reporter upon payment therefore, based upon the usual charge made for such copy.

11. Disqualification: No member of the Board shall sit in hearing or vote on any matter in which they shall be personally or financially interested.

12. Jurisdiction: At any time before, during or after the hearing on the merits, the Board may dismiss the appeal for lack of jurisdiction.

13. Voting: All appeals shall be decided by voice vote of Members. Votes need not be taken at the conclusion of the appeals hearing. Decisions that reverse or amend any order, requirement, decision or determination previously made by Lake County Utilities Department personnel require the affirmative vote of a majority of members present at a hearing.

14. Decision: Written notice of the decision shall be mailed to complainant within seven (7) days of the Board's reaching the decision. If the complainant requests conclusions of fact supporting the Board's decision, the Board shall prepare same within a reasonable time. Requests for preparation of conclusions of fact must be in writing and filed with the recording secretary no later than ten days after the decision is mailed to the complainant.

15. Final Order: The decision of the Appeals Board shall be considered a final order.

PERMIT FEE: For all decisions of appeals hearings that result in the issuance of a permit, payment is due at the time the permit is issued.

AMENDMENTS: These rules may be amended at any regular meeting of the Board by an affirmative vote of not fewer than four voting members of the Board, provided that such amendment has been presented in writing to each member of the Board at least five (5) days preceding the meeting at which the vote is taken.

1/15/04

EXHIBIT N

AGREEMENT FOR
FUTURE *(SANITARY SEWER/WATERLINE)* ASSESSMENTS AND/OR
***(SANITARY SEWER/WATERLINE)* EXTENSION OR TAP-IN FEES AND SERVITUDE**

THIS AGREEMENT AND SERVITUDE is made this _____ day of _____,200__ by and between _____*(property owner)*_____, hereinafter referred to as "Owner," the current owner of the real property described in Exhibit "A," situated in the ____*(municipality)*_____, County of Lake and State of Ohio, and known as being Permanent parcel number ____*(parcel*___ __*number)*_____, hereinafter referred to as "Property" and the Board of Lake County Commissioners, by and through its duly authorized agent, the Lake County Sanitary Engineer, hereinafter referred to as "Lake County."

SAMPLE
CONTACT LCDU FOR BLANK FORMS

Owner hereby agrees to pay applicable future assessments or future *(sanitary sewer/waterline) extension fees that may be levied pursuant to Lake County Department of Utilities Rules and Regulations or Ohio statues, for the extension of a__(sanitary sewer or waterline)__* to serve said Property.

This servitude shall run with the land and be binding upon the current Owner and its successors in title and assigns in title, it being specified that the obligations herein shall bind only the then-current legal title owner of the parcel at the time the fees and/or assessments are applied. Owner agrees that said property will be subject to this servitude and agrees that this document shall be recorded in the real property records of Lake County to reflect said servitude.

In consideration of the above, Lake County shall issue the necessary permits for the temporary installation of a temporary __*(sanitary sewer or waterline)*__ connection to __*(location)*__ for the facility hereinafter constructed by the owner on the property described in Exhibit "A"

Owner or the then-current legal title owner of the parcel agrees to tie-in permanently to any __*(sanitary sewer or waterline)*__ extension as referenced above within sixty (60) calendar days from completion of said __*(sanitary sewer or waterline)*__ Owner or the then-current legal title owner of the parcel further agrees to pay all costs and fees required by Lake County, including the assessments and tap-in fees contemplated herein and associated with reconnection the building plumbing to the __*(sanitary sewer or waterline)*__ extension within sixty (60) calendar days from completion of the __*(sanitary sewer or waterline)*__ extension.

SAMPLE
CONTACT LCDU FOR BLANK FORMS

OWNER:

_____ By:_____
Witness

Its:_____

_____ _____
Witness Albert J. Saari, P.E.
Lake County Sanitary Engineer

STATE OF OHIO)
) SS.
COUNTY OF LAKE))

Before me, a Notary Public in and for said County, personally appeared the above named _____, who acknowledged that he did sign the foregoing instrument as the duly authorized _____ of _____ and that the same is the free act and deed of said _____ and his free act and deed personally and as such officer.

IN TESTIMONY WHEREOF, I have hereunto set my hand and official seal at _____, Ohio, this _____ day of _____, 2004.

_____

Notary Public

STATE OF OHIO)
) SS.
COUNTY OF LAKE)

Before me, a Notary Public in and for said County, personally appeared the above named Albert J. Saari, P.E., who acknowledged that he did sign the foregoing instrument as the duly authorized Lake County Engineer and that the same the free act and deed of said Lake County Utilities Department and his free act and deed personally and as such officer.

IN TESTIMONY WHEREOF, I have hereunto set my hand and official seal at _____,
Ohio, this _____ day of _____, 20____.

SAMPLE
CONTACT LCDU FOR BLANK FORMS

_____
Notary Public

EXHIBIT O
APPLICATION FOR TAP-IN REIMBURSMENT

Project Name: _____ Date: _____

Project location: _____

Applicant: _____ Phone No. _____

Representative (if different): _____ Fax No. _____

Address: _____

_____

Applicant must be granted permission by resolution of the Board of Lake County Commissioners to construct the above improvement project. Such resolution shall authorize the collection of prorated shares of the cost of such improvement in accordance with Ohio Revised Code Section 307.73 and as provided by the LCDU's Rules and Regulations.

The Board shall collect and return to the Applicant a prorated share of the cost of such improvement in any instance in which such improvement is tapped into by a nonparticipant. Reimbursement shall be administered by the Lake County Department of Utilities and shall be subject to the requirements of the LCDU Rules and Regulations.

At the time of petition to the Lake County Board of Commissioners, Applicant must submit the following:

1. A project cost estimate prepared by a State of Ohio Registered Professional Engineer;
2. A "tentative tap in list" with an estimate of cost for each parcel within the project limits;
3. A list of participating parcels including the amount paid by each;
4. Proof, acceptable to LCDU, of written notification to non- participants of "tentative tap in";
5. An approval from all homeowners with proposed laterals.

Sample
Contact LCDU For Blank Forms

After completion of the improvement, the Applicant shall provide the following:

1. An actual total Project Cost Statement prepared by a State of Ohio Registered Professional Engineer and itemized to match the original project cost estimate. All receipts, payrolls, invoices and bills of lading required to prove the claim of cost for the total project must be included. The cost for the portion of the improvement that is eligible for the tap-in reimbursement shall be indicated on the Project Cost Statement.
2. An updated and official list of the participating properties prepared by a State of Ohio Registered Professional Engineer listing their front footage on the project and their individual project cost shares;
3. An updated and official list of the nonparticipating properties that will be subject to the tap-in reimbursement prepared by a State of Ohio Registered Professional Engineer, listing their front footage on the project and their individual prorated cost share (Tap-in Reimbursement) proposed for each nonparticipating property.

Nonparticipating properties will be authorized to connect to the improvement prior to the Applicant submitting the Project Cost Statement by making a deposit for an estimated cost of the tap-in reimbursement with the LCDU. When the project cost statement is submitted and approved and the actual cost of the tap-in reimbursement is calculated, the nonparticipant will either receive a refund or be required to pay the difference of the deposit and the actual tap-in reimbursement. No payment from any nonparticipant will be disbursed to the Applicant until the Project Cost Statement and updated participant and nonparticipant lists, as described above, have been submitted to and approved by the Lake County Department of Utilities.

A property shall be considered a nonparticipant and subject to the tap-in fee if the owner does not participate in the original construction and the property fronts on a portion of the improvement.

The Prorated share shall be based on the front footage of the improvement to the nonparticipant and shall not be in excess of the amount chargeable to such nonparticipant if such nonparticipant had participated in the original improvement.

The Applicant understands the requirements of the Lake County Board of Commissioners tap-in reimbursement policy and hereby agrees to adhere to said policy and provide the above required materials and information to be eligible for a tap-in reimbursement for the above project.

_____ _____

Applicant's Signature Date

Sample
Contact LCDU For Blank Forms

Exhibit P

Department-Wide Pipe Color-Coding Standard

All Sites

Raw Water ---	OLIVE GREEN
Plant Influent---	TAN
Settled Water ---	OLIVE GREEN w/ BLUE BAND
Potable Water ---	BLUE
Non-Potable Water---	GREY w/ BLUE BAND
Polymer---	YELLOW w/ WHITE BAND
Coagulant ---	ORANGE w/ GREEN BAND
Caustic Soda ---	ORANGE w/ BLACK BAND
Sodium Hypochlorite or Chlorine ---	YELLOW
Sodium Bisulfite---	YELLOW w/ BLACK BAND
Ferrous Chloride---	GREY w/ WHITE BAND
Carbon---	BLACK
Fluoride ---	BLUE w/ RED BAND
Phosphate ---	LIGHT GREEN w/ RED BAND
Potassium Permanganate---	PURPLE
Backwash Waste ---	LIGHT GREEN
Digester Gas---	ORANGE
Sludge ---	DARK BROWN
Natural Gas ---	RED
Compressed Air ---	DARK GREEN
Heating ---	WHITE
Roof Drains and Sanitary Vents ---	GREY

NOTES:

All piping in all sites must be properly colored (at minimum) 10 feet before and after every valve as well as 10 feet before and after entering and leaving a room or space.

When using two colors, a six-inch band must be used at thirty-inch intervals

EXHIBIT Q

GUIDANCE DOCUMENT FOR SIZING AND INSTALLATION OF GREASE INTERCEPTORS

Part I: Guidance for Grease Interceptor Sizing and Design Criteria

A. Introduction:

Information contained within this document is based on standard industry practices and guidance found in both the 1997 International Plumbing Code (IPC) Commentary and the Uniform Plumbing Code (UPC), Appendix H. Size, type, and location of grease traps shall be in accordance with the manufacturer's instructions, and the Lake County Department of Utilities Rules and Regulations.

B. Applicability:

These requirements are applicable to all commercial food service establishments, including those that are undergoing:

1. New construction.
2. Interior remodeling to accommodate expansion or operational modifications.
3. Changes of ownership/occupancy.
4. Any facility which may be experiencing difficulty achieving compliance with maintenance and/or wastewater discharge limitations.

C. Sizing Requirements:

Sizing methods described herein are intended as guidance in determining grease trap/interceptor sizes that will afford the County's sanitary sewer system a minimum degree of protection against grease and other obstructing materials. In approving a customer's plumbing or grease interceptor design, the County does not accept liability for the failure of a system to adequately treat wastewater to achieve effluent quality requirements specified under the Lake County Department of Utilities Rules and Regulations, Section 5, Pretreatment and Sewer Use. It is the responsibility of the generator and/or contractors to insure the appropriate level of treatment necessary for compliance with wastewater regulations.

Minimum acceptable grease interceptor sizing shall be accomplished as follows:

a. Sizing according to formulas found in Section D below.

b. Calculations performed by a Licensed Professional Engineer and approved by the sanitary engineer to determine the exact size is required.

c. In the circumstance of "single service kitchens" with no food preparation (heat/serve only), and which use only paper service items, a minimum 50 gallon per minute (gpm) flow rated, or 100 pound grease retention, mechanical grease trap may be used. In these instances, the grease trap is to be installed in an area separate from food handling area, and the trap must be readily accessible for cleaning and maintenance.

D. Grease Interceptor Sizing Formulas:

It is the responsibility of the generator and his/her contractors to ensure that the wastewater discharged from their facility is in compliance with the County's discharge limitations. For the purpose of plan review, a general assessment of grease trap/interceptor design and size will be performed using the following formulas. (These formulas have been demonstrated as industry standards capable of achieving the County's discharge criteria when systems are maintained in proper condition.)

Method 1: Uniform Plumbing Code, Appendix FT (A Grease Interceptor Sizing Worksheet Is Included At The End Of This Guidance)

Number of meals	x	waste flow	x	retention	x	storage	=	Size Requirement
Per peak hour (1)		rate (2)		time (3)		factor (4)		(liquid capacity)

Factors:

1) Number of meals served at peak operating hour (Seating Capacity) x Peak Factor
   a. Where Peak Factor for Fast Food Restaurant is 1.33
   b. And, Peak Factor for all other food service types is.. ..1.00

2) Waste Flow Rate:
   a. With Dishwasher.....6 gallon flow
   b. Without Dishwasher ..... 5 gallon flow
   c. Single Service kitchen .....2 gallon flow
   d. Food waste disposer.....1 gallon flow
3) Retention Times
   a. Commercial kitchen waste/dishwasher 2 .5 hours
   b. Single service kitchen/single serving 1.5 hours
4) Storage Factors
   a. Fully equipped commercial kitchen .....8 hr operation...1
   b. ..... .16 hr operation...2
   c. ..... .24 hr operation.. .3
   d. Single Service Kitchen 1.5

The Uniform Plumbing code includes a built-in safety factor that can yield very large grease interceptor size specifications. At this time, the County is not requiring interceptors larger than 2,000 gallons. However, the decision to use a trap smaller than that specified by the formula and calculations above is to be addressed in the plan submission.

Method 2: Five (5) Hour Detention/Peak Flow

A. Gallons of water used per hour of operation
B. A x 0.75 = average "gray water" flow per hour
C. B x 1.9 peak flow factor
D. C x 5 hours detention = volume of trap

Required volume of trap =A x B x C x D

E. Alternate Sizing Formulas / Proposals

Food service establishments that propose the use of alternate sizing techniques and/or procedures that result in specifications that differ from calculated requirements (or are less than the MIMIMUM 500 gallon recommendation), must submit formulas and other data to support installation of the proposed size grease interceptor. Submission should also provide documentation of ability to meet effluent quality requirements. This proposal must be signed by a licensed plumbing contractor or professional engineer.

F. Construction/Installation:

All permitting, construction, and inspection activities must be completed in accordance with the Lake County Building Department's Plumbing Code, and the Lake County Department of Utilities Rules and Regulations. Additionally, the following specifications must be incorporated into grease interceptor design.

a. The grease interceptor shall be constructed with a minimum of one baffle.

b.. Grease interceptors are to be installed at a minimum distance of 10 ft. from sinks and dishwashers to allow for adequate cooling of the wastewater. Water temperatures must be less than 120 degrees prior to entering grease interceptor.

c. All grease bearing waste streams should be routed through an appropriate grease interceptor, including: three-compartment sinks, pot/pan sinks, soup kettles, hand-washing sinks, dishwashers, mop sinks and floor drains.

Notable Exceptions: Drains that receive "clear waste" only, such as from ice machines, condensate from coils and drink stations, may be plumbed to the sanitary system without passing through the grease interceptor with the condition that the receiving drain is a "hub" type that is a minimum of two inches above the finished floor.

d. All concrete grease interceptors will be equipped with two sets of twenty four inch diameter manhole type rings and lids, one on the primary side and one on the secondary side, to serve as maintenance access ports.

e. All Grease Interceptors are to be installed with an Effluent Sampling Well. Sample wells will have a minimum10" diameter access cover and a minimum 6" drop from inlet to outlet piping through the sampling well. Mechanical Grease Traps and Interceptors that are installed above ground must be equipped with an influent flow regulator and an effluent valve assembly that allows for sample collection.

G. Customer (Generator) Responsibilities:

It is the responsibility of the customer (waste generator) to insure compliance with the County discharge limitations as specified in the Lake County Department of Utilities Rules and Regulations, Section 5, Pretreatment and Sewer Use.

G. Customer (Generator) Responsibilities: (continued)

Hazardous wastes, such as acids, strong cleaners, pesticides, herbicides, paint, solvents, or gasoline shall not be disposed of where they would go through grease interceptors or grit traps. Care must be taken in system design when commercial dishwashers are discharged through a grease interceptor,. Dishwashers use detergents and elevated water temperatures that will melt grease. If the interceptor is either too small or too close to the commercial dishwasher, grease may pass through the interceptor and into the collection system.

Generators are responsible for maintaining grease interceptors in continuous proper working condition, by removing the oil and grease buildup in the interceptor at sufficient intervals to insure compliance with the Lake County Department of Utilities Rules and Regulations, Section 5, Pretreatment and Sewer Use. Further, generators are responsible for inspecting, repairing, replacing, or installing apparatus and equipment as necessary to ensure proper operation and function of grease interceptors and compliance with discharge limitations at all times.

The Lake County Department of Utilities requires grease trap/interceptor maintenance records be maintained on site for three (3) years.

The Lake County Department of Utilities Rules and Regulations, Section 5, Pretreatment and Sewer Use discourages the use of enzymes, solvents, and emulsifiers as they will only change the form of grease, allowing it to be carried out of the trap/interceptor with the wastewater and deposited in the collection system.

Part II: Other types of Interceptors and sizing requirements

Interceptors are required for oil, grease, sand and other substances harmful or hazardous to the building drainage system, the public sewer or sewage treatment plant. Design, size, and location of pretreatment devices must be submitted by a licensed plumbing contractor or professional engineer for review and approval.

A. Laundries

Commercial Laundries, Laundromats, and dry-cleaners shall be equipped with an interceptor in order to reduce the quantity of lint and silt that enter the collection system. The system must be of adequate size and design to allow for cool-down of wastewater so that separation can be more readily achieved. The interceptor must be installed with a wire basket or similar device, removable for cleaning that prevents passage into the drainage system of solids larger than1/4 inch in any dimension, string, rags, buttons or other materials detrimental to the public sewerage system.

Sizing must be in accordance with guidance found in the Uniform Plumbing Code (UPC), Appendix H, which uses the following formula:

(TGC) x (CPH) x (RT) x (ST) = Size of Lint Interceptor (gallons)

A. Laundries (continued)

Where:
TGC = Total Gallons per Cycle
CPH = Cycles per hour
RT = Retention time
2.5 for Institutional Laundry
2.0 for Standard Commercial Laundry
1.5 Light Commercial Laundry
ST = Storage Factor, based on hours of operation;
1.0 for 8 hours of operation
1.5 for 12 or more hours

Currently, no effluent sample well is required for small commercial laundries. However, large and/or industrial laundries may be subject to Federal Pretreatment regulations. For more information please contact the, Lake County Utilities Department Pretreatment Director at (440) 350-3431

B. Car Washes

Self service car washes shall have grit separators with a minimum capacity of 1000 gallons for the first bay, with an additional 500 gallons of capacity for every other bay.

Additionally, wash racks must be constructed to eliminate or minimize the impact of run-off from rain/storm events-. Minimum requirements are roofed structures with at least two walls and appropriate grading to prevent storm water infiltration into the sanitary sewer.

An effluent sampling well is required, per specifications listed in Part 1, Section F, Subsection e, above.

C. Automotive Repair Facilities (Garages and Service Stations)

Where automobiles are serviced, greased, or repaired or where gasoline is dispensed, oil/water separators shall have a minimum capacity of 500 gallons for the first 1000 square feet of area to be drained, plus 250 gallons for each additional 1000 square feet of area to be drained into the separator.

An effluent sampling well is required, per specifications listed in Part 1, Section F, Subsection e, above.

Note: Parking garages shall not require a grit separator unless vehicle servicing, repairing, washing or, gasoline dispensing occurs. Areas in commercial garages utilized only for storage of automobiles are not required to be drained through a grit separator.

Grease Interceptor Sizing Worksheet

The Uniform Plumbing Code Formula

Company		**Calculated By**		**Date**	
Project		**Location**			

Follow these six simple steps to determine grease interceptor size.

	No of Meals Per Peak Hours		Waste Flow Rate		Retention Time		Storage Factor		Calculated Interceptor Size	Grease Interceptor
Enter Calculations > Here		X		X		X		=		
	Step 1		Step 2		Step 3		Step 4		Step 5	Step 6

1

Number of Meals Per Peak Hour (Recommended Formula):

Seating Capacity		Meal Factor		Meals per Peak Hour
	X		=	

Establishment Type:	**Meal Factor**
Fast Food (45 min)	1.33
Restaurant (60 min)	1.00
Leisure Dining (90 min)	0.67
Dinner Club (120 min)	0.50

Notes:

2

Waste Flow Rate:

Condition	**Flow Rate**
With a Dishwashing Machine	6 Gallons
Without a Dishwashing Machine	5 Gallons
Single Service Kitchen	2 Gallons
Food Waste Disposer Only	1 Gallon

Notes:

3

Retention Time

Commercial Kitchen Waste	
Dishwasher	2.5 Hours
Single Service Kitchen	
Single Serving	1.5 Hours

Notes:

4

Storage Factor

Kitchen Type	**Storage Factor**
Fully Equipped Commercial	
Hours of Operation	
8 Hours	1.00
12 Hours	1.50
16 Hours	2.00
24 Hours	3.00
Single Service Kitchen	1.50

Notes:

5

Calculate Liquid Capacity

Multiply the values obtained from step 1, 2, 3 and 4. The result is the approximate grease interceptor size for this application

Notes:

6

Select Grease Interceptor

Using the approximate required liquid capacity from step 5, select an appropriate size as recommended by the manufacturer.

Notes:

1½" OR SMALLER WATER S.C. LIMITS OF RESPONSIBILITY

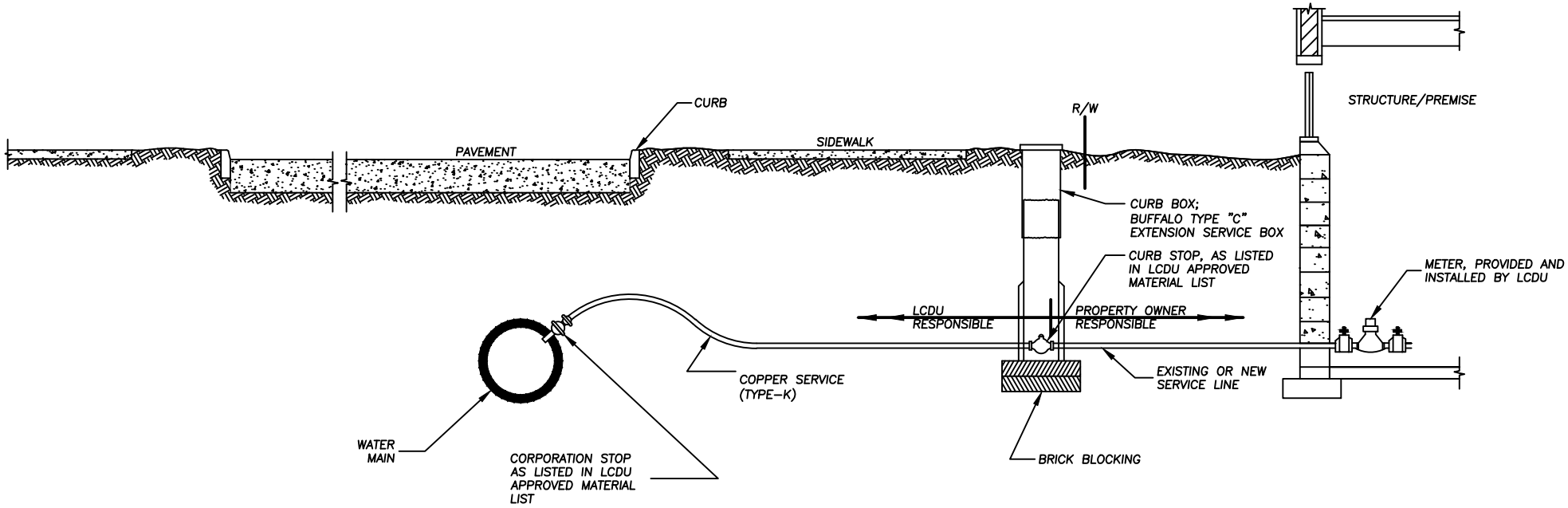

INSIDE METER SETTING

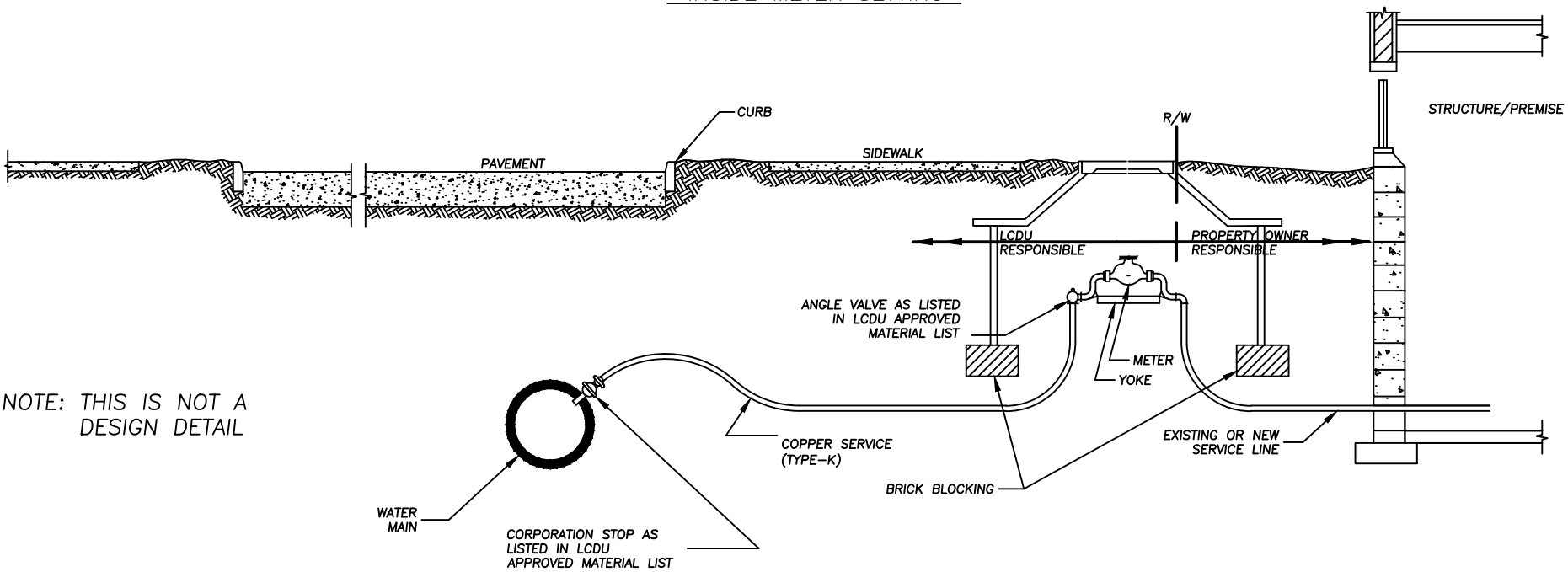

NOTE: THIS IS NOT A DESIGN DETAIL

OUTSIDE METER SETTING

LAKE COUNTY DEPARTMENT OF UTILITIES

FIG 1.41.1
DATE: 10-09

2" OR GREATER WATER S.C. LIMITS OF RESPONSIBILITY

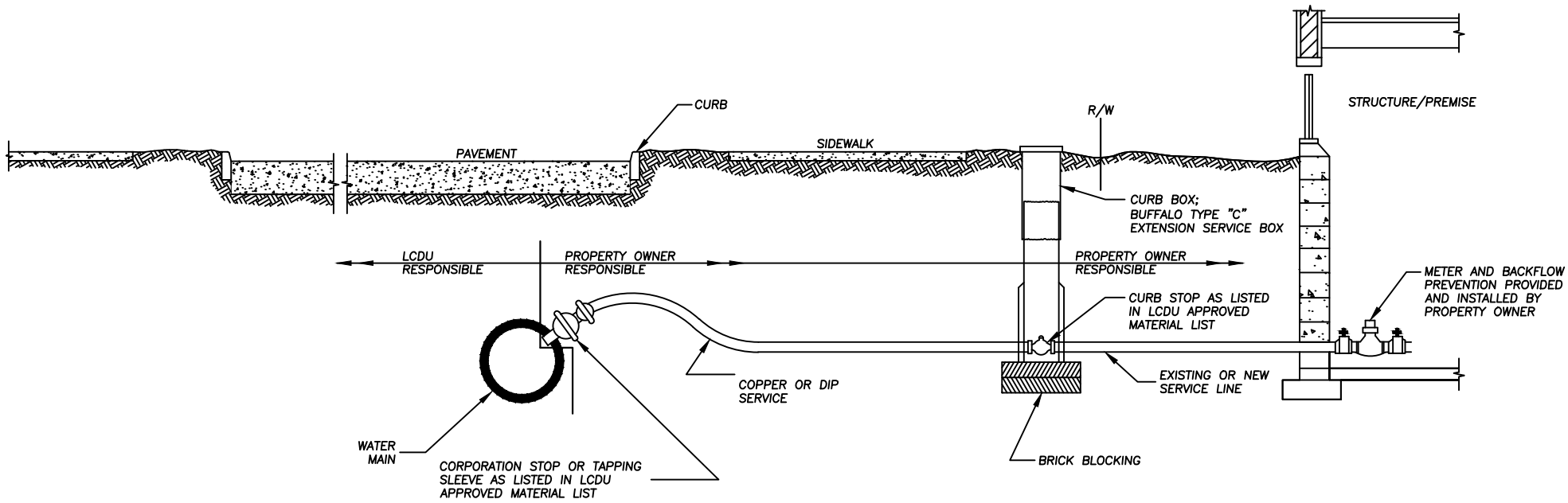

INSIDE METER SETTING

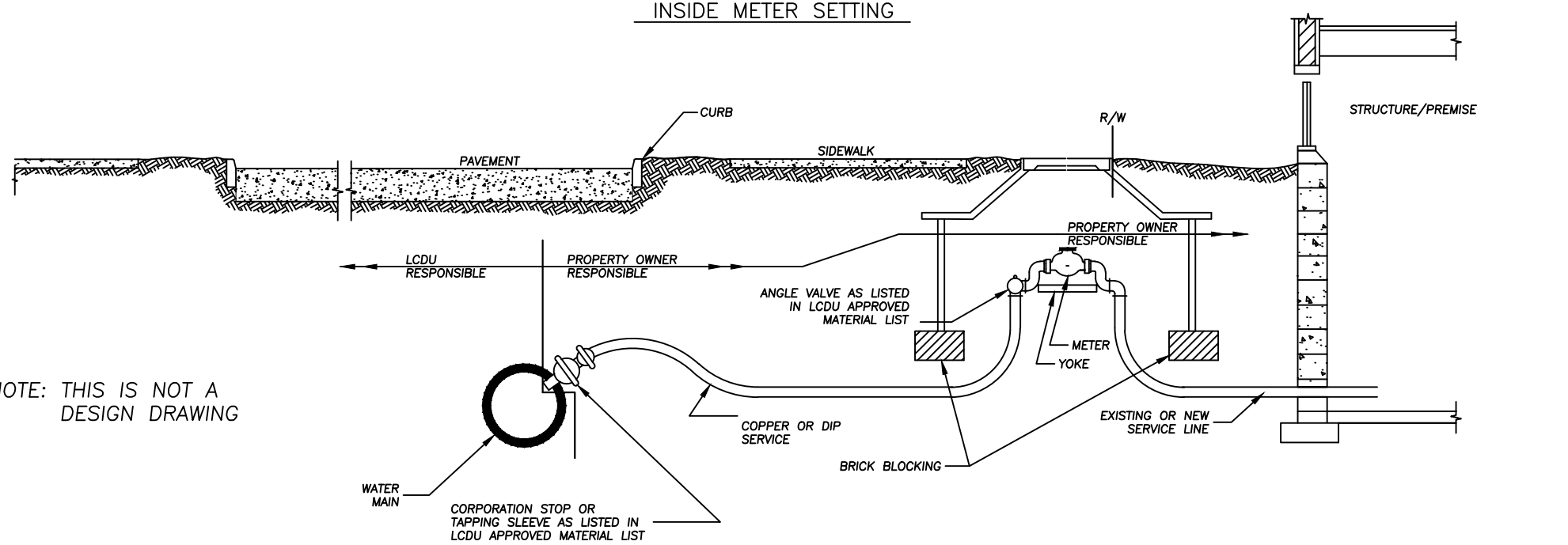

NOTE: THIS IS NOT A DESIGN DRAWING

OUTSIDE METER SETTING

LAKE COUNTYDEPARTMENT OF UTILITIES

FIG 1.41.2

DATE: 10-09

SANITARY SERVICE CONNECTION
LIMITS OF RESPONSIBILITY

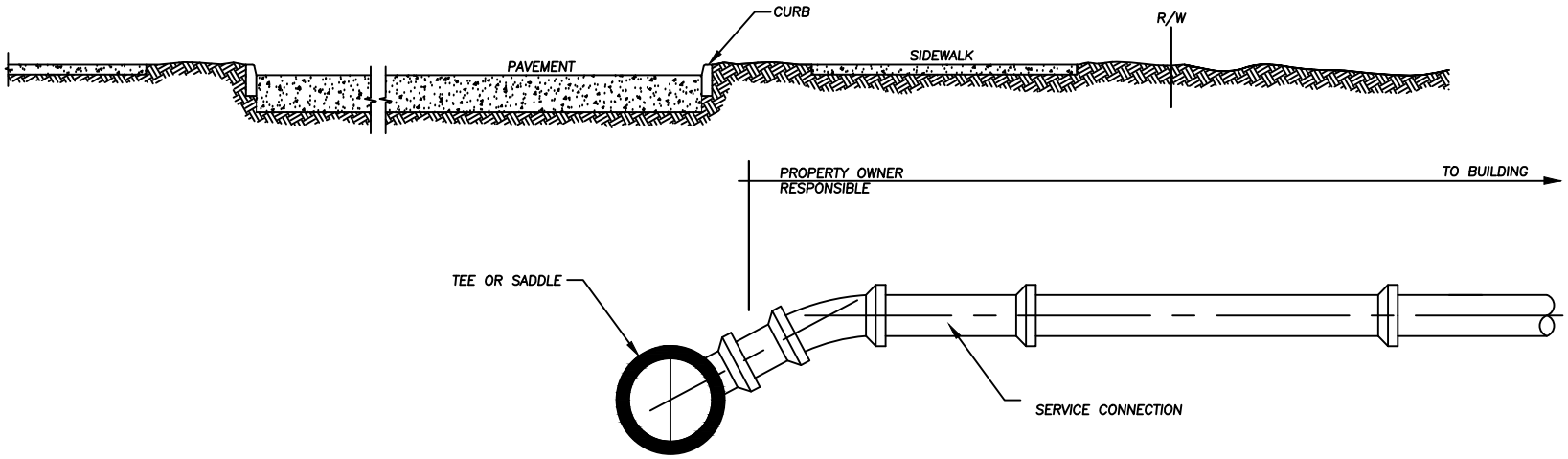

STANDARD SANITARY SERVICE CONNECTION

NOTES:

1. *SEE LCDU RULES AND REGULATIONS SECTION 1.46.T FOR MORE INFORMATION.*
2. *THIS IS NOT A DESIGN DETAIL.*

LAKE COUNTY DEPARTMENT OF UTILITIES

FIG 1.47.1

DATE: 8–11

Section 2 - Water Distribution

GENERAL REQUIREMENTS 2-1

DESIGN PLANS

2.00 WATER PLAN CRITERA

I. MATERIALS 2-1

2.01. PIPE AND FITTINGS 2-1

A. Requirements 2-1

B. Ductile Iron Pipe And Fittings 2-1

2.02. POLYETHYLENE ENCASEMENT 2-2

2.03. PIPE INSULATION 2-2

2.04. PIPELINE MARKERS 2-2

2.05. STEEL ENCASEMENT PIPE 2-3

2.06. GATE VALVES 2-4

2.07. TAPPING SLEEVES AND VALVES 2-4

A. Requirements 2-4

B. Tapping Sleeves 2-4

C. Tapping Valves 2-5

2.08. AIR RELEASE VALVES 2-5

2.09. VALVE BOXES 2-5

2.10. METER VAULTS 2-5

2.11. FLUSHING ASSEMBLIES 2-6

2.12. FIRE HYDRANTS 2-6

A. Assemblies 2-6

B. Fire Hydrants 2-6

C. Watch Valves And Valve Boxes 2-7

D. Piping 2-7

E. Hydrant Approaches 2-7

2.13. BACKFLOW PREVENTERS AND ENCLOSURES 2-8

A. General 2-8

B. Backflow Preventer Assembly 2-8

C. Backflow Preventer Enclosure 2-8

2.14. BACTERIA SAMPLING AND FLUSHING ASSEMBLIES 2-9
2.15. SERVICE CONNECTIONS 2-9
A. Service Connections 2-9
B. Water Meters 2-10
2.16. BEDDING AND BACKFILL 2-11
A. Bedding 2-11
B. Granular Backfill 2-11
C. Control Density Fill (CDF) 2-11

II. INSTALLATION 2-11
2.17. PIPE LAYING AND HYDRANT INSTALLATION 2-11
2.18. TRENCHES 2-12
2.19. PROTECTION OF EXISTING UTILITIES 2-13
2.20. TRENCH PROTECTION 2-14
2.21. PIPE EMBEDMENT 2-14
2.22. BACKFILLING 2-14
2.23. CONNECTIONS TO MAINS 2-16
2.24. ROCK EXCAVATION 2-17
A. General 2-17
B. Excavation 2-17
C. Disposal Of Rock 2-17
D. Damage To Existing Facilities 2-17
2.25. METERS AND SETTINGS 2-17
2.26. ELECTRICAL CIRCUIT FOR REMOTE METER REGISTERS 2-19

III. TESTING 2-20
2.27. DISINFECTION 2-20
2.28. PRESSURE AND LEAKAGE TEST 2-21
2.29. BACTERIOLOGICAL TESTS 2-22
2.30. COMPLETION OF TESTS 2-23

FIGURES

Figure 2.5.1 BORING AND STEEL ENCASEMENT PIPE DETAILS
Figure 2.5.2 SOLID BLOCKING DETAIL FOR WATERLINES
Figure 2.5.3 WATER MAIN RELOCATION UNDER PROPOSED SEWER
Figure 2.6.2 CUT-IN DETAIL WITH VALVE
Figure 2.6.3 M.J. TAPPING SLEEVE & VALVE
Figure 2.11.1 FLUSHING ASSEMBLY

Figure 2.11.2 BLOW-OFF ASSEMBLY

Figure 2.12.1 HYDRANT DETAILS

Figure 2.12.4 HYDRANT REMOVED AND RELOCATED OR REPLACED

Figure 2.12.5 HYDRANT APPROACH

Figure 2.13.1 REDUCED PRESSURE BACKFLOW PREVENTER INSTALLATION

Figure 2.13.2 DOUBLE CHECK VALVE ASSEMBLY INSTALLATION

Figure 2.13.3 PRESSURE VACUUM BREAKER

Figure 2.14.1 BACTERIA SAMPLING DETAIL

Figure 2.19.1 SUPPORT OF UTILITIES PERPENDICULAR TO EXCAVATION

Figure 2.22.1 TRENCH AND BEDDING DETAILS

Figure 2.25.1 SERVICE TIE IN FOR OUTSIDE METER DETAIL

Figure 2.25.2 SERVICE TIE IN FOR INSIDE METER DETAIL

Figure 2.25.3 2” TRAFFIC BEARING METER SETTING

Figure 2.25.4 2” NON-TRAFFIC BEARING METER SETTING

Figure 2.25.5 8” DOMESTIC & FIRE COMBINATION METER VAULT DETAIL

Figure 2.25.6 OUTSIDE METER SETTING 4” & LARGER, DOMESTIC ONLY

Figure 2.25.7 OUTSIDE METERREPLACEMENT

Figure 2.25.8 2” INSIDE METER SETTING WITH BACKFLOW PREVENTOR

Figure 2.25.9 WATER SERVICE 2” DIA. AND LESS, ABANDONMENT DETAIL

Figure 2.26.1 REMOTE METER FOR BASEMENT

Figure 2.26.2 REMOTE METER FOR CRAWL SPACE

Figure 2.26.3 REMOTE METER FOR SLAB

Figure 2.26.4 INTERIOR RISER DETAIL

SECTION 2 - WATER DISTRIBUTION

GENERAL REQUIREMENTS

The design of water facilities shall comply with the "Recommended Standards for Water Works" (10 States Standards), latest edition.

All materials shall be manufactured in the United States of America wherever available. Concrete work shall be as Specified in ODOT Item 604.

All work shall conform with the General Requirements in Section 1 for seeding, restoration, landscaping, roadway replacement, etc.

DESIGN PLANS

2.00 WATER PLAN CRITERA

General Water Notes - LCDU - See Exhibit A at the end of Section 2.

General Water Connection Procedures - LCDU - See Show restraint lengths in profile.

Exhibit C at the end of Section 2.

Provide stationing for all mainline water and sanitary.

Dead-end water mains are to be avoided. Dead-ends prevent circulation of the water which in turn imposes hydraulic restrictions to the flow of water.

Line valves should be provided where intersecting streets are in excess of 1000 feet apart.

Tee intersecting streets should be provided with a minimum of two line valves and cross intersections with three line valves, one or two valves on run of pipe and one on the branch. Line valves and valve boxes are to be located opposite property lines. Valves installed between intersections shall be located one length of pipe from the closest hydrant location on the run of pipe.

On all over-passes and underpasses vertical bends must be 45° bends or less. All horizontal bends should be no more than 45° bends. No 90 degree bends will be permitted. Where possible, offset bends may be used. Run of pipe across or under obstruction must have restrained joints with at least 18" vertical clearance and a lateral clearance of at least 24". Line valves and boxes must be installed at both ends of underpass or overpasses to assure ease of turn-off with minimum disruption of service.

A measurement tie-in between the location of the proposed water main and the closest intersecting street centerline should be noted on the plan.

All in-active service connections on allotment frontage on abutting streets must be plugged at the main unless they fall within frontage subdivision and will be used. Property lines must be shown to determine use.

Minimum cover over all water mains should be at 5'-0" from established grade (from the top of cover to the top of pipe).

At 90 degree turns, do not use ell fittings, use two 45 degree fittings.

Where pipe is to be bored across pavement and not open-cut, the water main must be restrained joint pipe used per LCDU standards. Additional requirements may be necessary from other governing authorities.

All new commercial non residential, industrial or multi-family development areas will have hydrants spaced at no more than 250 feet apart. Residential areas will have hydrants spaced at no more than 300 feet apart.

It is recommended that a hydrant be place relatively close to the intersection and then follow the hydrant spacing recommendation for the particular type of improvement.

Where any part of a building or structure is more than 350 feet away from hydrant (as measured by hose laying length), the local Fire Chief or LCDU may require a change of hydrant spacing. Where necessary, a private water supply line and hydrants 300 feet apart or less may be required for fire protection. Fire Department approval is required and is to be provided by the Engineer.

A. All dead-end pipes must have a complete 2" flushing assembly or a complete hydrant installed.

i. Size of Water Mains – The LCDU shall determine the size and the material used for all water mains with the following minimums as to size for new improvements or replacements:

1. New waterlines in residential areas shall be a minimum of, eight inches (8") in size providing intersecting streets are connected so as to keep the length of straight pipe to a length of 1500 feet or less.

b. New waterlines used for commercial, non residential or industrial supply shall be twelve-inches (12") in size (minimum).

c. New waterlines in County roads, through roads, freeway crossings, railroad crossings, and in bridges, twelve-inches (12") in size (minimum).

d. Replacement water mains and water mains installed for the sole purpose of providing a loop shall be sized based on the LCDU hydraulic water model.

B. Water mains are to be located not less than 5'-0" from the property line or easement line in the street or easement in which it is to be installed. Under this provision, connection stop valves or meter vault manhole ring and covers should not fall within proposed sidewalk areas.

C. All hydrants, curb stops, and meter vaults must be contained within the dedicated right-of-way or within a public easement lateral limits.

D. Hydrant valves must be set approximately three (3) feet from the centerline of the abutting water main. Hydrant valves must be restrained. The distance from the hydrant valve to the hydrant is variable. Additional requirements may be necessary from other governing authority.

E. Contractors must insure that all main line valves and hydrant valves are in an open position during chlorination and before acceptance by the LCDU.

F. Where there is an existing tee in the distribution main from which the proposed water main is to be extended, a branch pipe segment, valve and box must be installed on the distribution main to obtain service. This is at the LCDU's or its designated representative's discretion.

G. Where a branch pipe segment, valve and box are installed from which service is to be taken, the connecting pipe must be installed at right angles from the distribution main to the line valve located at the property line. A bend will then be installed if necessary to align the run of pipe in the proposed street or easement.

H. Where a run of distribution main must underpass a flowing stream of water, boltless restraint joint pipe with C110 ductile iron fittings must be installed from start to completion of the depressed section. Valves will be installed on the level sections at the start and completion of the underpass.

I. In all allotment layouts, water mains or sewers in proposed streets must be extended to the further most limit of the allotment, as described in 1.11.S.

J. Where a hydrant is located at the end of a run of pipe, as in a cul-de-sac, connections must be made ahead of the reducer on the hydrant branch.

K. Where a change in pressure service occurs in existing street or allotment in which a water main is to be installed, the LCDU or its designee will determine the location of the point of service change and a standard gate valve and box will be required at that point in the run of pipe. This valve will be kept closed during normal service.

L. Plans of water main installations for apartments, office buildings, factories or condominium units whether rental or individual ownership shall note on plans the number of stories and building units.

M. On private water and sewer service connections there shall be at least 5'-0" clearance from centerline of water service line to centerline of sewers, conduits, etc. with a minimum of 18 inches clearance from outside to outside of pipes or structures in a vertical plane.

N. In any extension of an existing water main, the contractor must remove existing line valve and install new line valve at the end of the existing water main. This will assure a minimum shutdown of service to existing connections and provide a new tight valve to test against.

O. Where temporary by-pass piping is to be installed in order to maintain service to existing connections and/or hydrants during construction, the by-pass may be laid on the ground where there is no danger of freezing. During freezing weather, the by-pass must be installed below ground, below the frost line. All pipe must be in accordance with AWWA C651, Section 5.1.1.1 Option A. No service tees are to be installed in new run of pipe. Taps for connections will be made after the main has been chlorinated and tested.

P. Water lines for proposed streets must be installed from the distribution main to the abutting property line and a line valve and box installed at the property line with a plug and clamp for future extension.

Q. Where connections or hydrant installations are to be abandoned, they must be plugged at the distribution main. They shall not be plugged at the water service stops or hydrant valves.

R. Water lines on private property are owned and operated by the property owner or owners. Plans for condominium projects and sanitary sewer and/or water line projects on private roads shall include a copy of a Reserve Fund Affidavit establishing exclusive funds of $15,000 for water repairs and/or $15,000 for sanitary sewer repairs. The reserve fund or funds shall be administered by the condominium association or a homeowner association. The affidavit shall include a means to replenish said funds after any needed repairs are made. No reduction in the reserve fund or funds shall be made nor shall this reserve fund provision be amended or removed from the Condominium or Homeowners Association By-Laws, without the consent of the Lake County Department of Utilities.

S. Water service taps shall have 5' horizontal separation from other taps. Water service taps shall have 3' horizontal separation from any pipe joint.

I. MATERIALS

2.01. PIPE AND FITTINGS

Requirements - Pipe, fittings and appurtenances shall conform to the latest edition of the referenced Standards.

The manufacturer shall furnish an affidavit indicating that all pipe, fittings and appurtenances have been manufactured and tested in accordance with the requirements of the applicable referenced Standards. A copy of the affidavit, indicating the project on which the material is to be used, shall be forwarded to the LCDU for approval prior to construction.

All pipe, fittings and appurtenances shall be appropriately marked for purposes of identification. The materials and methods of manufacture, and the completed pipes, fittings and appurtenances shall be subject to inspection and rejection at all times. The LCDU shall have the right to make inspections.

Ductile Iron Pipe And Fittings - Ductile iron pipe shall be designed in accordance with AWWA C150 and manufactured in accordance with AWWA C151 and shall be thickness Class 53. If crossing, or within, railroad right-of-ways, Thickness Class 56 shall be used. The pipe shall be of the push-on joint or mechanical joint type, with joints within the lengths noted on the drawings to be restrained type joints. Furnish the LCDU with calculations to support lengths of restrained joint pipe to be used at all fittings and valves. Restrained joint lengths shall meet Ductile Iron Pipe Research Association (DIPRA) minimum lengths recommended. All pipe shall be coated with a bituminous material on the exterior and shall be cement mortar lined by the factory in accordance with AWWA C104. Pipe shall be furnished in minimum 18-foot lengths unless otherwise specified.

Fittings shall be of ductile iron, shall conform to AWWA C153 or C110, as specified, and shall be coated and lined and have joints as specified for the pipe. All bolts shall be stainless steel type 304 or 316 with anti-galling agent. Mechanical joints and push-on joints shall be in accordance with AWWA C111, incorporating rubber gaskets.

Field-loc type restrained joints are not acceptable. Restrained mechanical joints shall be of the pipe manufacturer's standard design, or shall be as listed in the LCDU Approved Materials List, of ductile iron and with a working pressure of at least 250 psi and a minimum safety factor of 2:1. All fittings and valves shall have restrained mechanical joints.

Whenever it is necessary to cut the pipe at fittings, valves, specials or elsewhere, the remaining portions may be used where possible to minimize the number of scrap pieces when the project is complete; however, pieces less than 5 feet in length shall not be used. Cut pieces of pipe shall be beveled to manufacturers specifications.

2.02. POLYETHYLENE ENCASEMENT

Contractor and/or developer is responsible for coordinating with the Ductle Iron Pipe Research Association (DIPRA) to test the project site to determine the corrosiveness of the soil and the need for polyethylene encasement. Report shall be submitted to the LCDU for determining the need, if any, to wrap the pipe. The LCDU may modify the backfill material or pipe type based on the report findings.

Pipe, fittings and appurtenances shall be field wrapped with a minimum 8-mil thick polyethylene tube meeting the requirements of AWWA C105, as directed by the LCDU. Installation shall be in accordance with Method A and the instructions of the manufacturer. All overlaps and seams shall be completely taped. All rips, punctures and other damage to the polyethylene shall be acceptably repaired in accordance with the manufacturer's recommendations. Tape shall be 2-inch wide plastic backed adhesive tape which will bond securely to both metal surfaces and the polyethylene film.

2.03. PIPE INSULATION

Provide minimum 1-inch cellular glass insulation with an aluminum jacket; adequate to prevent freezing at 0 degrees F; suitable for burial. Installation shall be in strict accordance with manufacturer's requirements. Insulation material shall be as listed in the LCDU Approved Materials List or as approved.

Provide insulation in any area where the depth of cover, horizontal on slopes or vertical, is less than or equal to 5'-0". Install pipe insulation and jacketing per manufacturer's recommendations, and to prevent entry of water between the pipe and insulation.

2.04. PIPELINE MARKERS

Provide pipeline markers for water main installation in railroad or highway right-of-ways or in easements other than maintained residential yards or as required by the LCDU.

In railroad or highway right-of-ways, furnish and install prominent durable, weatherproof signs located over the centerline of the pipe at each right-of-way line, and along the pipeline in the right-of-way for longitudinal occupancy. Signs shall show the name and address of the Owner, contents of the pipe, pressure in pipe, pipe depth below grade at the sign and an emergency telephone number in the event of pipe rupture. The signs shall be acceptable to the railroad company or the highway department having jurisdiction.

In easements other than railroad or highway right-of-way, furnish and install prominent, durable weatherproof signs located over the centerline at each end of the easement and along the pipeline in the

easement. Signs shall have the word WATER PIPELINE or WATER VALVE permanently imprinted on them, and shall comply with APWA/ULCC color coding for utility locating.

Signs shall be located at each right-of-way line, at beginning of easements, at each valve location and at 500-foot intervals along the pipeline outside the public right-of-way, or such shorter interval to allow sight distance between two consecutive marker signs.

2.05. STEEL ENCASEMENT PIPE

Where shown, the pipe shall be installed within welded steel encasement pipe. The encasement pipe shall meet the requirements of ASTM A139, Grade B. Any coating applied in the field shall be applied a minimum of 48 hours prior to installation. The encasement pipe diameter shall be six inches larger than the diameter of the pipe bell, rounded up to the next nominal pipe size. The minimum wall thickness of the encasement pipe shall be 0.375-inches for new casing pipe or 1/2" for used casing pipe and is based on steel pipe having a minimum tensile strength of 60,000 psi and a minimum yield strength of 35,000 psi. The wall thickness shall be adjusted as necessary for other grades of pipe. All joints shall be fully welded on the circumference.

The encasement pipe shall be installed by boring and jacking and in such a manner so as to allow the pipe to be laid at the grade shown. Boring and jacking operations shall be continuous. The pipe shall be blocked in place within the encasement pipe to prevent shifting or flotation. The pipe inside the casing shall be of the boltless restraint type with a minimum of Class 56 rating. The ends of the encasement pipe shall be blocked up in such a way as to prevent the entrance of foreign material, but allowing leakage to pass in the event of same within the encasement pipe. See Figure 2.5.1.

Blocking shall be accomplished using wood blocks or approved casing chocks. Wood blocking shall be as shown on the drawings and used only as approved. Wood blocks shall be of hardwood lumber. Banding straps for holding the wood blocks in place shall be of stainless steel. Casing chocks shall be of polyethylene or stainless steel with a liner and UHMW polymer plastic runners, shall be as listed in the LCDU Approved Materials List, and shall be installed in accordance with the manufacturer's instructions. Blocking shall be notched to secure banding to blocking without slipping off. Three sets of blocks or chocks shall be used per pipe segment. See Figure 2.5.1. Solid blocking a minimum of 8 inches thick shall be installed on each end of the encasement pipe. See Figure 2.5.1.

The Owner will secure all necessary permits for boring pipe, but the Contractor shall pay the cost of all necessary inspection, insurance, etc. No work shall begin until a permit, if required, has been issued. The LCDU shall either secure upfront the cost of all necessary inspections, insurances, etc., or shall withhold monies due to Contractor for same until satisfactory proof is received from Contractor that all costs have been paid. The Contractor shall be responsible for meeting the requirements of the governing authority, which may include approval of equipment to be used, for installation of the encasement pipe and for providing same with the required notification prior to the start of such work. The LCDU shall not be responsible for any additional cost to the Contractor as the result of the Contractor's failure to meet any of the governing authorities requirements.

Steel encasement pipe in and across railroad right-of-ways shall meet the requirements of the railroad company. Steel encasement pipe in and across highway right-of-ways shall meet the requirements of the highway department having jurisdiction.

2.06. GATE VALVES

Valves 16 inches in diameter and smaller shall be gate valves. Gate valves shall be iron-body, resilient-wedge gate valves meeting the requirements of AWWA C509 or DIP body meeting the requirement of C515. Valves shall be designed for a working water pressure of 200 psi, shall be of the non-rising stem type with standard AWWA nut, and shall open in the direction chosen by the municipality. Stem seals shall consist of at least two O-rings. Ends shall be mechanical joint. Gate valves shall be supplied by manufacturers listed in the LCDU Approved Materials List, and shall match those existing in the system. The manufacturer shall furnish an affidavit indicating that all tests and provisions of the applicable standard have been met.

Each gate valve shall be complete with a valve box as subsequently specified in Item 2.09. Valves shall be set plumb with the valve box accurately centered over the valve. If required, operators shall be provided with extension stems such that the operating nut is located approximately 4'-0" below grade. Extension stems shall be centered in the valve boxes by approved stem guides.

2.07. TAPPING SLEEVES AND VALVES

Requirements - When an existing main into which a connection is to be made cannot be shut down or taken out of service without interrupting local businesses, the connection shall be made with a tapping tee and valve. If the connecting line is the same size as the existing main, a cut-in sleeve must be used with solid sleeves. All local business must be accommodated. Scheduling of all shutdowns shall be approved by LCDU prior to shutdown. The installation of pressure taps shall be made by the LCDU.

Prior to ordering the tapping sleeve assembly, the Contractor shall expose a section of the existing main and verify the circumference of the pipe.

The Contractor shall be responsible for inspection, proper assembly, alignment and fitting of the tapping sleeve and tapping valve to the main. In the event of any mismatch of purchased materials, it shall be the Contractor's responsibility to refit them in the field or to make the necessary arrangements with the manufacturer for factory refit.

The severed section of water main shall be removed through the tapping valve and given to the LCDU as proof of satisfactory execution of the operation. The LCDU may retain the coupon for such analysis or tests as are necessary to evaluate the condition of the existing water main.

Other requirements for installation of the tapping sleeve and valve shall be as subsequently specified in Item 2.23 – Connections to Mains.

Tapping Sleeves - Tapping sleeves shall be of stainless steel and have a mechanical joint. Gaskets shall extend the entire interior length of the sleeve to form watertight joints when the side bolts are

tightened in accordance with the manufacturer's instructions. Tapping sleeves shall be supplied by manufacturers as listed in the LCDU Approved Materials List. Tapping sleeves shall be tested to 200 psi.

Tapping Valves - Tapping valves shall be gate valves as previously specified in Item 2.06 except as modified by the following:

The waterway shall accommodate full size cutters. One end shall match the tapping sleeve outlet. The valve outlet shall be mechanical joint in compliance with AWWA C111.

Each tapping valve shall be complete with a valve box as subsequently specified in Item 2.09. Valves shall be set plumb with the valve box accurately centered over the valve. If required, operators shall be provided with extension stems such that the operating nut is located approximately 4'-0" below grade. Extension stems shall be centered in the valve boxes by approved stem guides.

2.08. AIR RELEASE VALVES

The valve shall be a 2-inch diameter ball valve, as subsequently specified for curb stops in Item 2.15.A. The valve shall be screw connected into a tapped blind flange on an appropriate fitting in the main with the required lengths of stainless steel pipe and fittings installed so as to permit use without entering the manhole. Stainless steel pipe shall be provided with a hose bib to permit connection of hose to allow ease of use.

Each air release valve shall be complete with a manhole as subsequently specified in Item 2.10.

2.09. VALVE BOXES

Valve boxes shall be constructed of cast iron, shall be coated with a bitumastic paint, shall be of the three piece screw type, shall have a 5-1/4 inch shaft, heavy duty top section and shall be provided with a slotted heavy, neat-fitting cover having the word "WATER" cast on the top. The base of the valve box shall cover the entire bonnet section of the valve. The three-piece valve box shall have sufficient length, such that when installed, the top of the cover shall be flush with the surrounding surface with each section properly engaged. Valve boxes shall be as listed in the LCDU Approved Materials List.

After installation, valve boxes shall be checked to ensure the box is not filled with stones, dirt, debris or backfill material and that the operating nut is centered to allow operation of the valve.

2.10. METER VAULTS

Meter Vaults shall be constructed with approved precast concrete pipe sections. Walls shall rest on an ODOT Class C reinforced concrete foundation. Single depth pipe sections shall be set in a full bed of, and all joints shall be filled with, mortar composed of one part, by volume, Portland cement and two parts clean hard sand. Depths requiring multiple pipe sections shall use O-ring gaskets meeting ASTM C478. Where the pipe passes through the manhole walls, provide minimum 1/2-inch thick watertight gasket as listed in the LCDU Approved Materials List, around the pipe. Foundations shall be complete with sumps, supports and blocking as shown.

All 24-inch meter vaults shall be provided with a removable top slab constructed of Class C reinforced concrete. The top slab shall have 2 inch diameter lifting holes, filled with mastic to prevent the

entry of dirt, or approved lifting rings, and a cast iron manhole frame and cover. The manhole frame and cover shall be heavy-duty gray iron castings conforming to ASTM A48, with a minimum weight of 375 pounds, and shall be the manufacturer models as listed in the LCDU Approved Materials List. Frame shall have a height of 7 inches and a clear opening of 24 inches. Covers shall be solid and shall have the word “WATER" cast in the top. Both the underside of the cover and the upper surface of the ledge upon which it rests shall be machined.

The top of the frame and cover shall be flush with the surrounding surface. The frame shall set in a full leveling bed of mortar on the top slab. Any elevation adjustment up to a maximum height of 12-inches shall be accomplished using precast adjusting rings. Bituminous material shall be placed on both sides of any and all adjustment rings. Mortar shall use Type M cement with waterproofing additive.

Steps shall be provided in the chamber. Steps shall meet the requirements of ASTM C478 and shall be of reinforced polypropylene. Steps shall consist of a 1/2-inch steel reinforcing rod encapsulated in a copolymer polypropylene plastic and shall incorporate a notched tread ridge and retainer lugs on each side of the tread ridge. The steel rod shall be continuous through the entire length of legs and tread. Steps of the press fit type driven into the concrete wall shall have a pullout resistance of not less than 1,500 pound per leg, as evidenced by test data.

2.11. FLUSHING ASSEMBLIES

Flushing assemblies must be EPA approved for bacteria sampling. Flushing assemblies shall be used at the end of water mains where a hydrant is not located. Each flushing assembly shall be complete with anchored piping, watch valve and valve box. Flush type fire hydrants shall be provided with a cast iron flush box with non-locking lid. See Figure 2.11.1.

Watch valves shall be gate valves as previously specified in Item 2.06. Valve boxes shall be as previously specified in Item 2.09. Provide ODOT #6 stone as shown. The LCDU shall approve style of flushing assembly and shall further determine if a main line gate valve prior to the flushing assembly will be required. Flushing assemblies shall be as listed in the LCDU Approved Materials List.

2.12. FIRE HYDRANTS

Assemblies - Fire hydrants shall be complete assemblies of the types shown in the details on the drawings, each including fire hydrant, watch valve and valve box, piping (mainline tee, and anchoring pipe and fittings as required), and appurtenances. (See Figures 2.12.1 and 2.12.4.) Installation shall be as specified in section 2.17.

Fire Hydrants - Fire hydrants shall be of the compression type, opening against and closing with the water pressure in the main, and shall meet the requirements of AWWA C502. Hydrants shall have a 5-1/4 inch valve opening, two 2-1/2 inch hose nozzles; and one 4-1/2-inch pumper nozzle. The nozzle threads and opening direction shall be as specified by the local jurisdiction. All nozzles must be attached to hydrant with reverse threads. Setscrews are not acceptable. A shield over the operating nut and an exterior oil reserve plug with an interior reservoir for the upper stem is required. The bonnet must be nut and bolt assembly. All above and below ground bolts and

nuts shall be 304 or 316 stainless steel. Hydrants shall be traffic models with frangible barrel section and stem coupling, shall be furnished with a positive operating drain valve and installed with the valve open, and shall be designed so that when properly operated, water hammer will be prevented. All lower stems shall be 410 stainless steel. Hydrants shall be suitable for setting in trenches of the depths and in the locations shown, and shall be furnished with a 6 inch mechanical joint base. Standard hydrant depth of bury is to be 5 foot. Where reasonable, appropriate field adjustments of the water main depth of bury are to be made to accommodate the 5 foot hydrant depth of bury. If necessitated by the field conditions, or for depths of bury greater than 6 feet, increased depth of bury adjustments shall be accomplished by furnishing and installing the hydrant manufacturer's standard upper barrel and stem extensions or grade adjustment offset. For plan specified hydrant depths of bury greater than 5 foot. The Contractor shall be responsible for determining hydrant depth of bury based on the locations shown. The breakaway flange shall be set at 3-inches above to finished grade. Each hydrant if necessitated by field conditions, shall be provided with an offset grade adjusting fitting, as listed in the LCDU Approved Materials List. Distance from road to hydrant shall be 3 to 8 feet with curb and 5 to 8 feet with ditch and hydrant approach. Hydrants shall be located at 300-foot intervals, and be located such that the hydrant is on the property line of adjacent parcels, where applicable. Hydrants shall be painted the colors as designated by the LCDU or the local Fire Department, and hydrant caps shall be removed and nozzles shall be greased with food grade lubricant (NSF) prior to acceptance.

Fire hydrants shall be as listed in the LCDU Approved Materials List. The manufacturer shall furnish an affidavit indicating that all tests and provisions of AWWA C502 have been met. The Contractor shall verify that the hydrant pumper nozzle, operating nut, outlet nozzle cap nuts and hose threads conform to those in the system before the new hydrants are shipped. Hydrant exterior above ground level, in addition to finishing as required by AWWA C502, shall be field painted with two coats of paint as required by the LCDU after backfilling is complete with the exception of hydrants that are factory painted with a one coat UV resistant high gloss 2-part polyurethane enamel, color as specified. If the coating on the hydrant is damaged the hydrant must be painted.

Watch Valves And Valve Boxes - Watch valves and valve boxes shall be gate valves and valve boxes as previously specified in sections 2.06 and 2.09, with the valves to have ends suitable for receiving the spigot end of 6 inch anchoring pipe.

Piping - Piping shall be Class 53 and fittings designed in accordance with AWWA C153 or C110 where specified and manufactured in accordance with AWWA C151. All pipe and fitting shall be coated with a bituminous material on the outside and shall be cement mortar lined in accordance with AWWA C104. Mainline tees shall conform to the requirements of AWWA C153. The branch shall be standard mechanical joint for connecting to anchoring pipe and fittings, and shall be of the mechanical joint anchoring type when connecting to a watch valve.

Anchoring pipe- shall be of the plain end mechanical joint type incorporating an integral cast shoulder and follower gland.

Hydrant Approaches - Hydrant approaches shall be provided where a ditch line exists between the edge of pavement and a fire hydrant. This will permit ease of access to the hydrant. All earthwork for hydrant approaches shall be in accordance with all applicable requirements of ODOT Item 203. Pipe culverts shall be reinforced concrete pipe meeting the requirements of ASTM C76 - Class IV with rubber O-ring joints and ODOT Item 706.02. Contractor shall provide calculations to the LCDU supporting size of pipe culvert proposed. When proposed pipe abuts existing pipe, furnish and install a 1-foot wide by 6-inch thick concrete collar encasement. All pipe shall be bedded to 12 inches over the top of the pipe with Class B bedding, and the remainder of the trench backfilled as specified in section 2.22. See Figure 2.12.5. Fill material shall be select excess excavated material. All approaches and all fill and other earth areas disturbed by the Contractor's operations shall be seeded as previously specified in Section 1.

Hydrant Abandonment- Hydrant installations to be abandoned on an active water main or active service line should be abandoned under LCDU inspection by method of complete removal of hydrant tee, auxiliary valve and hydrant installation of a spool piece of pipe in place of tee. See Figure 2.5.4. Certain circumstances may require a different abandonment method to be approved by LCDU.

2.13. BACKFLOW PREVENTERS AND ENCLOSURES

General - Backflow preventers are required for the following circumstances: fire line, lawn sprinkler system, homes with auxiliary water systems, industrial buildings, and other circumstances as determined by the LCDU and/or Ohio EPA manual of "backflow Protection and Cross-Connection Prevention", latest edition. All drawings for backflow prevention must be submitted to and approved by the LCDU prior to implementation of said backflow preventer. Backflow preventers, except for fire supression systems, shall be of the reduced pressure principle per the Ohio Environmental Protection Agency (Ohio EPA) and shall be installed above grade, either in a building or in a heated enclosure. Fire supression systems shall be provided with a double check backflow preventer per NFPA requirements, latest edition, and installed above grade also. The backflow preventer assembly and enclosure shall be coordinated including heating requirements. Ample space shall be provided for inspection of and work on backflow preventers. Backflow preventers and enclosures shall be installed downstream of the meter and shall remain the property of the property owner for maintenance and operation requirements.

Backflow Preventer Assembly – All backflow preventer assemblies installed in the Lake County Utilities Water District must have UL/FM approval, and meet AWWA/ANSI C511 and C510 specifications. Standard and/or compact styles are acceptable. All backflow devices shall be installed in the horizontal position unless vertical installation is approved by the device

manufacturer in writing. The reduced pressure principle backflow preventer shall have a spring loaded check assembly. The assembly shall be complete with AWWA C509 or C515 gate valves previously specified with ANSI B16.1, Class 125 iron body, bronze trim, rising stem, handwheel, OS&Y, and flanged ends.

Backflow Preventer Enclosure - The reduced pressure principle backflow preventer shall be installed in a heated enclosure. The enclosure, depending on location may be an existing or new building which is heated; and which meets the requirements of the LCDU (if new) and other building ordinances. If an existing building is not appropriate, a heated enclosure shall be provided, including electrical power for heat, per the manufacturer's recommendations, based on size of backflow preventer. The heated enclosure shall comply with ASSE-1060 Performance Requirements for Outdoor Enclosures for Backflow Prevention Assemblies. New heated enclosures shall be as listed in the LCDU Approved Materials List. Both styles shall fully enclose the backflow preventer assembly, valves, handwheels and stems, and be constructed on an ODOT Class C concrete pad, as recommended by the manufacturer. The heating and electrical requirements shall comply with manufacture's recommendations. See Figure 2.13.1.

2.14. BACTERIA SAMPLING AND FLUSHING ASSEMBLIES

Sampling and flushing assemblies will be installed at minimum every 1,200 l.f. of water main or as directed by the LCDU. A corporation cock will be installed in the main with a bacteria sampling and flushing assembly at each sampling location. A curb stop or ball valve can be used in the portion of the assembly that is above ground to facilitate the sampling procedure. At least 18 inches of smooth copper tube must extend beyond the valve (located above ground) and be bent in a downward arc. Additional length shall be provided to prevent flooding, to go into storm conveyance system, etc. Contractor shall be responsible for controlling direction of flow to proper drainage location to prevent flooding. Once installed, Contractor shall not be permitted to operate or otherwise tamper with bacteria sampling and flushing assemblies without approval from the LCDU. The bacteria sampling and flushing assembly shall not be removed until the Contractor has received written notice that the main has passed all bacteriological tests per AWWA C651-92; Section 6.3 and Ohio EPA requirements. See Figure 2.14.1.

Materials for bacteria sampling and flushing assemblies shall be as specified in Section 2.15, with the exception that a ball valve may be substituted for the curb stop. The materials for sampling will be abandoned after use.

See Division III – Testing for additional testing requirements.

2.15. RESIDENTIAL SERVICES

Service Line- Service line shall be a minimum 1 inch for residential services from the main to the interior plumbing. See Figure 2. 25.1. The size of the service line may require an increased diameter due to the proposed length of the service line. Engineering calculations shall be submitted to the LCDU to confirm that the service line will meet the minimum discharge pressure

requirements. Locations of service line, when shown on the drawings, are approximate only. Final locations will be established at the time of construction by the LCDU and a representative of the Owner of the property being served. Service line shall be installed “after” new main has been tested and disinfected. After tap has been made curb stop can be checked for visible leaks and service line must be “blown off” by opening the curb to flush any air or debris in the line. Service line shall include the furnishing and installation of corporation stop, curb stop and box, and service pipe and fittings as required. Materials shall meet all applicable requirements of AWWA C800. Work shall be in accordance with all applicable requirements previously specified in this Section.

Corporation stops- shall be of the best quality bronze or brass, and shall be a flared coupling. Corporation stops shall be subjected to an air test at the factory, and shall be as listed in the LCDU Approved Materials List.

Curb stops- shall be of the best quality brass or bronze, and shall be a teflon coated ball valve complete with flare connections. Curb stop shall be set such that the operating lever runs perpendicular to the main when in the "on" position. Curb boxes shall be of steel and cast iron and shall be as listed in the LCDU Approved Materials List. Concrete blocking shall be provided under each curb box. Curb stop depth shall be 4’.0” to 5.0” from final grade. If grade changes prior to final connection of service line to pigtail or curb stop, the contractor will bring curb stop to a depth of 4’.0” to 5’.0” from final grade.

Service pipe- between the main and the outside meter setting or curb stop shall be of Type K copper tube meeting the requirements of ASTM B88. Flare type unions shall be used with the copper tube, prior to the meter outside setting or curb stop. Each service line two-inch diameter and smaller shall be provided with a tail piece of copper a minimum of 5’ after curb stop or outside of meter vault.

Pipe shall be installed under street and highway pavements by pushing or boring. In addition, no joints shall be permitted within these limits.

Water Meters – Water meters shall be magnetic drive, with a scan code remote read, i.e. residential ,commercial, non-residential and industrial. They shall read in 100 cubic feet and be set with gate or ball valves before and after the meter. Water meter setting shall be approved by the LCDU. Less than 2” diameter water meter installation shall be installed by LCDU. Providing and running of the remote meter wire is the responsibility of the Contractor. LCDU will complete the remote meter connection once meter wire is located and installed.

Water meters greater than 1 1/2” diameter shall be rigid plumbed. These meters shall have by-pass piping with a lockable gate valve installed in the by-pass. Only Teflon tape shall be used on the fittings and threads located on the supply side of the water meters.

All water meters shall be obtained from the LCDU. Water meters greater than 1 1/2” diameter shall be installed with a strainer. Water meters shall be horizontally mounted approximately 30-42” above the floor and must be accessible and protected from damage, especially freezing.

The Owner/Contractor shall install a remote water meter wire from the proposed water meter location to the vicinity of the proposed electric meter base location. The remote meter wire shall terminate outside the structure in the front or sidewalls of the structure and allow at least a two feet pigtail at each end. The remote shall be set in the immediate vicinity of where the remote wire exits the structure. The remote meter wire shall be single stranded, thermo-coated, 18 gauge wire with three conductors. This requirement shall apply to all residential, commercial non-residential and industrial connections.

Service Line Disconnect- If LCDU determines parcel remains buildable, additional water service will not be installed on this parcel and service from main to shut off valve or meter vault meets requirements determined by LCDU:

2.15.1. For properties with inside water meter, Owner will be responsible to schedule with LCDU for water to be shut off to property, final read to be taken, water meter removed and LCDU inspection scheduled for work to be performed. Under LCDU inspection, Owner will then have customer's side of service line disconnected from service shut off valve, removed a minimum of three feet from shut off and service shut off box brought to grade and marked for location. LCDU Inspector will document service line size and material type as well as location of the service shut off box or meter vault with measurements off of edge of road and off an adjoining parcel driveway or building line.

2.15.2. For properties with outside water meter and vault, Owner will be responsible to schedule with LCDU for water to be shut off to property, final read to be taken, water meter removed and LCDU inspection scheduled for work to be performed. Under LCDU inspection, Owner will then have customer's side of service line disconnected from inside meter vault, removed a minimum of three feet from vault and vault brought to grade and marked for future location. LCDU Inspector will document service line size and material type as well as location of the service shut off box or meter vault with measurements off of edge of road and off an adjoin parcel driveway or building line.

Water Service Abandonment- If LCDU determines parcel is not suitable to rebuild, parcel is changed or combined with another parcel that has water service in place, an additional water service line is to be installed on this parcel, or service line from main to shut off valve or meter vault is not acceptable to LCDU:

A. Owner will be responsible to schedule with LCDU for water to be shut off to property, final read to be taken, water meter removed and LCDU inspection scheduled for work to be performed. Under LCDU inspection, Owner will then have service line abandoned at water main by shutting of corporation stop, disconnecting service line form corporation stop, removing service line a minimum of three feet from main, marking corporation stop with a wye pole in front of corporation stop to a height two feet above stop, and removing shut off

box or vault. If connected to the main by tee or other device, owner shall abandon service by method approved by LCDU.

BEDDING AND BACKFILL

A. BEDDING- D.I.P. waterline pipe bedding shall be class "C" bedding unless otherwise required by the sanitary engineer. Pipe embedment shall be select on-site granular material (clean, finely divided earth free of rocks, foreign material and free of frozen materials from bottom of trench to 12-inchs above the pipe barrel. For waterline installation in rock or poor soil conditions the sanitary engineer may require class "B" bedding. Initial bedding shall be fine granular material (fine granular material means No. 57 limestone or ODOT 703.06 sand). Embedment from top of initial bedding to 12 inches above the pipe shall be fine granular material or select on-site granular material as directed by the sanitary engineer. The sanitary engineer may require class "A" bedding for installations in low strength soil conditions.

Concrete encasement shall be ODOT Class C concrete.

Granular Trench Backfill - The granular backfill under pavement and buildings shall meet the requirements of ODOT Item 304 crushed limestone.

Trenches within railroad right-of-way, except for longitudinal occupancy, shall be backfilled with crushed stone with a top size of the aggregate to be a maximum of two inches and to have no more than 5% passing the number of 200 sieve. The gradation of the material is to be such that a dense stable mass is produced. In areas greater than 3 feet beyond edge of railroad right of way, pavement, or structures, select on-site granular material approved by the sanitary engineer may be used above bedding in lifts not to exceed 6-inches.

Control Density Fill (CDF) - Control Density Fill (CDF) may be required by the local roadway authority. The design mix used shall be approved by the LCDU, and shall have a maximum design strength of 100 psf.

II. INSTALLATION

2.16. PIPE LAYING AND HYDRANT INSTALLATION

Pipe sections shall be strung along the route of the mains within the right-of-way or easement so as to interfere least with pedestrian and vehicular traffic and to protect the pipe as fully as possible. Care shall be taken at all times in handling the pipe so as not to damage it in any way and at no time shall other pipes or material be placed in the pipes.

The use of equipment with metal tracks or treads will not be permitted on paved surfaces which will not be removed during trenching operations without some type of pavement protection such as matting or rubber tracks. Heavy equipment shall not be driven over streets, but shall be moved by trailer.

The mains shall be laid in the locations and at the grades shown on the drawings, except as specifically permitted by the LCDU in order to avoid existing or proposed utility lines or any other obstructions encountered in the progress of the work; to secure a more readily accessible position for

trenching; or to facilitate the location of various appurtenances of the main. Deflection of pipe joints shall be in strict accordance with the pipe manufacturer's instructions.

When abrupt changes in the grade of the main are necessary to avoid existing utilities or other obstructions, suitable fittings, in general 1/8 maximum bends shall be used so as to secure an easy flow of liquid and to provide sufficient cover below same unless otherwise specified or noted on the drawings. Pipe shall be so located to maintain a minimum clearance of 18 inches in all directions with respect to other utilities to allow for taps to be inserted. Care shall be taken to avoid high and low points in the mains. Dead-end stubs may be terminated with a restrained gate valve and blowoff (for further use) as determined by the LCDU.

Pipe shall be laid at a minimum 10-foot horizontal distance from sewers and manholes and at a minimum 18 inches vertical distance from sewers at their crossing, both as measured between the outside of the pipe walls. At crossings, one full length of water main pipe shall be installed centered on the pipe being crossed so both joints will be as far from the sewer as possible.

With push-on joints, the surfaces to be in contact with the rubber gasket shall be wiped clean and dry just prior to making the joint and, when making the joint, a lubricant shall be used in accordance with the manufacturer’s recommendations. With mechanical joints, the surfaces to be in contact with the rubber gasket shall be brushed with soapy water to remove all sand and grit just prior to making the joint

The Contractor is responsible for disinfection of the water main in accordance with AWWA C651, as subsequently specified in Section 2.27. The Contractor shall follow AWWA C651 Section 4 - Preventive and Corrective Measures during Construction. All pipes shall be thoroughly cleaned inside and outside before being lowered into the trench; shall be kept clean during and after laying; and the end of the pipe shall be sealed with a watertight plug when pipe laying is stopped for any reason. If, in the opinion of the Engineer, the pipe contains dirt that will not be removed during subsequent flushing operations, the interior of the pipe shall be cleaned and swabbed, as necessary, with a 1% chlorine solution (10,000 mg/l) prepared by mixing one pound of high-test calcium hypochlorite (65-70% CL) and 8 gallons of water.

Hydrants shall be set plumb and to the grade of the curb, street, alley, highway or right-of-way as approved by the LCDU. The breakaway flange shall be within three inches of finished grade, either existing for developed streets or proposed grade for proposed streets. Any readjustment of the grade will require readjustment of the fire hydrant as noted above. Pumper nozzle shall always be set toward the middle line of the street, highway or right-of-way prior to final acceptance of the project. Prior to the water main being placed into service, the Contractor shall either turn pumper nozzle away from the middle line of the street or provide plastic bags, as approved by the LCDU, to cover each hydrant.

The hydrant base and watch valve shall each rest on approved concrete blocking. Excavation for hydrants shall first be backfilled with ODOT #6 aggregate for a minimum depth of two feet. Remainder of excavation shall be backfilled as specified for trenches.

Should it be necessary, as determined by the LCDU to set a fire hydrant at a greater depth of bury as a result of changing hydrant location from that shown, elevation adjustment shall be accomplished by

furnishing and installing the fire hydrant manufacturer's standard barrel and stem extensions or grade adjustment offset.

2.17. TRENCHES

Except where otherwise specifically required or permitted by the LCDU, the mains shall be laid in open trench excavated to a depth sufficient to provide not less than 5 feet of vertical cover over the top of the pipe barrel and to provide not less than 4 inches of bedding below the outside bottom of the pipe barrel to 12 inches above the pipe barrel. No blocking shall be permitted under the water main. However, pipes shall be installed at a greater depth when shown on the drawings; when necessary to pass under other utilities or obstructions; or where necessary to prevent high points in the main. In addition to the minimum vertical cover, where any pipes parallel roadside ditches or streams, a lateral cover shall be provided at least equal to the specified vertical cover.

Prior to trenching, in lawn areas and in fields used for farming, both as determined by the LCDU, all topsoil shall be removed and stockpiled for replacement during backfilling.

The width of the trench shall not be more than 24 inches greater than the outside diameter of the pipe, except at joints, where sufficient space shall be provided for properly making the joints without raising the length of pipe above the solid bottom of the trench. Care shall be taken to detect and remove stones and debris in the bottom of the trench which would damage the pipe or be detrimental to the proper bedding of the pipe, with removal to be for a depth of at least 6 inches below the bottom of the pipe and replaced with bedding material.

Trenches in rock shall be excavated to a depth of 6 inches below the outside bottom of the pipe barrel and bell when the pipe is laid on its final grade and the pipe shall then be laid on a cushioning layer of bedding material as specified and provided by the Contractor. Rock excavation shall be in accordance with the requirements subsequently specified in Section 2.24.

Prior to open trenches entering the paved limits of a street, alley, driveway, sidewalks, or parking area, the pavement shall be neatly cut for its full depth, removed, and disposed of off the Project site. Street and road crossings shall be constructed in accordance with the requirements specified in Section 1 and the highway department having jurisdiction.

Trench excavation shall include the removal of such other existing facilities noted to be removed.

Trenches shall be kept free of water during pipe laying and jointing. When water exists in the trenches at the time of pipe laying, the Contractor shall dewater the trench at his expense.

2.18. PROTECTION OF EXISTING UTILITIES

Existing underground utilities along the route of construction, as shown on the drawings or marked at the time of construction by the utility owner, shall be uncovered by the Contractor and their elevations determined at least 200 feet in advance of pipe installation. Contractors shall contact OUPS 48 hours prior to any excavation work.

All underground utilities, when encountered, shall be adequately supported, shored up or otherwise protected whenever exposed in the excavation. Timber supports shall be a minimum of 6 inches square.

Supports shall extend into undisturbed earth a minimum of 12 inches each side of the trench and the pipe, conduit, etc., banded or tied to the bridging for its full length. Where bridging cannot be supported by a firm foundation, the Contractor shall provide vertical support for the bridging, including any lateral bracing necessary to provide a firm and substantial support. Supports and bracing shall be of native hardwood and shall be furnished and installed by the Contractor. See Figure 2.19.1.

Above ground (aerial) utilities, including power, telephone and cable television, shall remain in service at all times. Any anticipated disruption of service shall be with the full knowledge of the utility company and requires advance notice to the affected users by the Contractor. Removal of guy wires and holding of poles shall be done as required to complete the work, shall be as agreed upon by the utility company and the Contractor with no additional cost to the LCDU.

Arbitrary disruption of underground and aerial utility services will not be permitted.

2.19. TRENCH PROTECTION

Where necessary to prevent caving of the trench and other excavation, and for protection of workmen and nearby structures, trench protection shall be provided per OSHA standards by and at the expense of the Contractor. Trench protection shall be by trench box, wood sheeting and bracing or such other methods as determined by the Contractor. Contractor shall have a competent person on site to determine the appropriate method for the conditions.

Wood sheeting and bracing shall be of sound lumber suitable for the purpose intended and shall be so arranged as to support the trench walls and existing structures and utilities. Sheeting left in place shall be cut off not less than 18 inches below ground surface.

Sheeting and bracing not required to be left in place may be removed at the discretion and responsibility of the Contractor after backfill has been placed and compacted to a level at least two feet above the top of the pipe. In no case shall sheeting be pulled in increments exceeding three to four feet in order to avoid the danger of breaking the pipe due to the weight of the backfill. Upon removal of sheeting and bracing, voids left due to such removal shall immediately be filled and the backfill re compacted.

Where it is necessary to drive sheeting below the centerline of the pipe, it shall be driven below the bottom of the pipe as determined by the LCDU, and that sheeting below a point two feet above the top of the pipe shall be left in place.

2.20. PIPE EMBEDMENT

After the pipe has been laid and the joints made, the full length of each pipe shall be thoroughly bedded. The material shall be placed in layers not exceeding 6 inches in thickness, loose measurement, and securely compacted by hand or mechanical tamping while taking care not to displace or damage the pipe or joints.

2.21. BACKFILLING

Local requirements must be followed when backfilling. The requirements that follow are the minimum acceptable.

Backfill shall include the material placed above the pipe embedment material previously specified. No heavy or large quantities of backfill material shall be placed over the pipe until backfilling has progressed to a depth of at least 3 feet over the top of the pipe barrel. All backfill material shall be carefully placed so as not to damage the joints or displace the pipe. Backfilling shall immediately follow trenching and pipe laying operations to reduce the possibility of damage to pavements and utilities.

Trenches within existing and proposed stoned streets, alleys, driveways, stoned parking areas and concrete or brick sidewalks shall be backfilled ODOT 304 well compacted in 6-inch lifts. The material shall be placed and compacted as a minimum to not less than 98% of maximum density as determined in accordance with ASTM D1557 (Modified Proctor) or as required by the local authority having jurisdiction. Contractor shall provide Certified Proctor test from limestone supplier with the shop drawings, prior to stone being delivered to the project site.

Where mains are installed along existing and proposed paved or stoned streets, alleys, driveways and parking areas, the specified compacted granular material shall also be provided for backfilling any portion of the trenches falling within that area below a line drawn at 45 degrees to the horizontal from the surface at the edge of the pavement or back of curb and above the horizontal plane of the pipe embedment material. See Figure 2.22.1.

For trenches within existing or proposed paved streets, alleys, driveways and paved parking areas, a controlled density fill (CDF) may be required by local authority in lieu of the specified ODOT 304 backfill. The mix shall be placed in a usable fluid form and in uniform vertical lifts. Design, finishing and protection of the material shall be recommended by the manufacturer for the application. Quality control test procedures of the manufacturer shall include ASTM C138 - Test for Unit Weight, and ASTM C39 - Test for Compressive Strength. No compaction is required for C.D.F.

Trenches where water mains are installed longitudinal to railroad tracks shall be backfilled as determined by the latest edition of the railroad requirements. The backfill material shall be placed in loose six inch lifts and compacted to at least 95% of its maximum density with a moisture content that is not more than 1% greater than or 2% less than the optimum moisture as determined in accordance with current ASTM Designation D - 1557 (Modified Proctor). When the backfill material is within three feet of the subgrade elevation (the interface of the ballast and the subsoil), a compaction of at least 98% will be required. Compaction test results confirming compliance must be provided to railroad company's Engineer by the Contractor.

The LCDU may require Contractor to check compaction of the backfill at the cost of the Contractor.

Where trenches are backfilled with granular material, the Contractor shall remove excess excavated material. Any excess excavated spoil shall be removed to an approved dump site at the Contractor's expense.

In all paved streets and highways, immediately upon completion of other backfilling operations and prior to the end of work for that day, a temporary pavement as specified in Section 1 shall be provided and shall remain in place and be properly maintained until such time as the permanent pavements are placed.

Permanent pavements shall be placed within two weeks after completion of tests and acceptance of each section of the water main.

For backfilling the remainder of the trenches, as much of the excavated material as possible shall be replaced until backfilling has progressed to a depth of at least 3 feet over the top of the pipe barrel.

The material shall be finely divided free of stones 3 inches or greater in any dimension, boulders, organic material or other harmful debris, and shall be placed in 6-inch layers, loose measurement, and compacted by mechanical tamping.

Also, immediately upon completion of other backfilling operations and prior to the end of work for that day, a temporary sidewalk shall be provided, and shall remain in place and be properly maintained until such time as the permanent sidewalk is placed. The temporary sidewalk shall consist of a minimum of 1-1/2 inches of the specified compacted granular backfill material placed to the same width as the original sidewalk, and shall be furnished, placed and maintained by and at the expense of the Contractor. The temporary sidewalk shall be reshaped and regraded prior to the installation of permanent sidewalk.

After backfilling, along weed or unsodded areas the material shall be graded to conform to the original ground profile. In lawn areas and in fields used for farming, all topsoil removed and stockpiled prior to trenching shall be replaced and graded to conform to the original ground profile. In lawns and other areas where grass exists, as determined by the Owner or the LCDU, the area shall be graded and made ready for seeding as specified in Section 1.30. In lawn areas, if the existing replaced topsoil does not provide the required 4-inch minimum depth as specified in Section 1.29, the Contractor shall provide additional topsoil at his expense.

The Contractor shall be required to regrade and reshape all road shoulders and all ditches or swales from existing high points to existing drainage structures or other outlets along the proposed improvement. The Contractor and the LCDU shall mutually agree and establish all ditch grades to be restored prior to construction. Ditches, which are reshaped, shall have reasonable side slopes. Vertical or steep slopes will not be permitted.

2.22. CONNECTIONS TO MAINS

New mains shall be connected to existing mains using proper fittings. Connections shall be made in a manner acceptable to the LCDU. All connections to AC pipe shall be via pad adaptors. AC pipe shall not be cut with a saw. All cuts shall be accomplished by snap cut. No cut-ins or connections to existing mains shall be made unless at least 48 hours notice of such cut-ins or connections is given to the LCDU. All such work shall be planned so as to reduce the number of shut-offs.

Two days prior to shutting valves on existing lines, the Contractor shall notify in writing all affected property Owners and the LCDU of such shut off. The shut off time shall be kept to a minimum and shall be made at off-peak hours or on weekends.

The operation of all existing valves shall be accomplished by a representative of the LCDU. The Contractor shall not operate existing valves. Any operation of the existing valves shall be subject to the fines permitted by law.

The LCDU assumes no responsibility for any delay occasioned by special requirements or conditions which must be met in making connections.

Extreme care shall be taken in making such connections to prevent contamination of the existing mains. Before making cut-ins or connections to existing mains, all fittings, valves and pipe shall be washed with clean water and then disinfected by washing with a chlorine solution having a residual chlorine strength of not less than 50 ppm.

Plugs removed from existing mains that are not damaged may be reused within the Project, and those remaining after completion of construction shall remain the property of the LCDU.

2.23. ROCK EXCAVATION

General - The term "rock excavation" shall include the removal of such material as cannot be broken and removed by ordinary excavating equipment. The definition of ordinary excavating equipment does not include rippers or power operated jack hammers. Disintegrated, weathered, rotten and loose rock particles capable of removal by ordinary methods are not included within the scope of rock excavation.

Excavation - Excavation shall be carried to a sufficient depth to provide for a cushioning layer of bedding material as previously specified in Section 2.18. Width of trench shall be not more than previously specified for the respective type of pipe.

Excavation for structures shall extend to a plane 4 inches below the underside of the concrete foundations and be confined to limits two feet beyond the outside of such foundations.

Disposal Of Rock - Except under special permission from the LCDU, rock removed by excavation shall not be used for backfill, but shall be disposed of by the Contractor off the Project site. Necessary bedding and backfill for trenches and other excavations in rock excavation shall be approved by the LCDU.

Damage To Existing Facilities - The Contractor shall be responsible for all damage to existing structures, piping, sewers, drains, cables, conduits, equipment and appurtenances resulting from his rock excavation operations, and shall repair same to the satisfaction of the Owner and the LCDU.

2.24. Per the Ohio Basic Building Code, where the water pressure within any building exceeds 80 psi, a water pressure reducing valve or regulator shall be installed immediately after the water meter to reduce the pressure to a maximum of 80 psi within the building. Installation shall follow the LCDU procedures in Item 2.17. Compression fittings are allowed out of the right of way and downstream of the meter. Otherwise flare fittings shall be used.

The valve shall be the same diameter as the service pipe. Only no-lead brass bushings shall be used in the meter setting. The installation of meters and setting shall be as follows:

In all structures with basements, the meter will be installed within two (2) feet of where the service line enters the basement wall.

The meter will be located between (1) and three (3) feet from the basement floor and no closer than eight (8) inches from the wall.

After the meter has been installed, it will be the responsibility of the property owner to insure that complete access to the meter is maintained at all times.

In all structures without basements, the meter will be located as follows:

Slab Type - The meter will be installed within two (2) feet after entering the utility room with the same location requirement as for structures with basements.

Other Types - The meter will be installed in a location to be approved by the LCDU.

All meters of two (2) inch diameter or larger that are installed shall be installed at floor level.

Meters one and one-half inches (1-1/2”) in diameter and smaller shall be installed at a height of not more than three (3) feet above floor level.

All inside meter installations shall be so arranged that the meter connections shall extend not less than eight (8) inches from the wall.

On one (1) inch diameter installations, a stop and waste valve shall be installed immediately ahead of the meter and a shut-off valve immediately behind the meter.

On one and one-half inch (1-1/2”) diameter meters and larger, a shut-off valve shall be installed immediately ahead of and immediately behind the meter.

On meters with a diameter larger than one and one-half inch (1-1/2”), a by-pass must be installed with LCDU seal on the by-pass.

Meters two inches (2”) and larger in size to be located outside a building shall be installed at the expense of the customer in a vault equipped with piping and valves as specified by the LCDU.

Meters 2” and larger for commercial, non-residential and industrial accounts shall have a bypass line and testport for the purpose of testing the accuracy of the meter without any loss of service to the customer.

LCDU will provide the large meter for new customers and apply a fixed quarterly charge to the water bill based upon the meter size. ECR’s are required for new interior installations and TRPL’s are required for new exterior (pit) installations. The LCDU will provide the meter and the reading device, and the parcel owner is responsible for the initial installation.

For existing parcels with large meters, at said time when a meter is determined malfunctioning, either resulting from a meter test, visible indication or damage, the LCDU will replace the meter, begin applying a fixed quarterly (See Section 7) charge to the water bill based upon the meter size, and will thereafter own the meter and related apparatus, and will be responsible for future replacements. The determination to repair or replace any meter due to failure or due to inappropriate application, such as the wrong meter size or type, shall be made solely by the LCDU.

The parcel owner is responsible for installing the replacement meter. The 2" meter fee (see section 7) will be applied to all accounts whose meter was provided by LCDU at no cost to the parcel owner.

The builders or property owners must provide an adequate location within the building for installation of the water meter. This location shall be freely accessible and shall not be hidden or covered with other obstruction. Such settings must at all times have unobstructed access for the purpose of reading and servicing the meter. Under no condition shall a meter be placed under a sink, in a closet or a secluded location.

A specially designed protective enclosure, removable by LCDU employees without removing screws, or bolts and latches may be placed over a meter in an unprotected position in the kitchen only. Meters may not be placed in an attached garage or crawl space.

Plumbers shall install only brass meter connections approved by the LCDU.

A drain with sufficient capacity to carry off all water is recommended to be installed in such a manner that damage to the property and/or furnishings from such leaks is prevented.

The LCDU in any case is not responsible for damages caused by water leaking from a meter or meter setting.

Change in piping necessary to reset a meter to avoid freezing shall be at the cost of the customer.

All builders and property owners must provide one-half inch (1/2") conduit from the meter to the outside of the building in order to permit the LCDU to set a Remote Read meter. The LCDU will specify the location of the Remote Read meter.

See the LCDU Approved Materials List for approved equipment.

See Figures 2.25.8 for meter details. For all of the above installations, any permanent structures such as furnaces, water heater, etc. must be installed so that access to the meter for reading and maintaining is not restricted.

For all of the above installations, any permanent structures such as furnaces, water heater, etc. must be installed so that access to the meter for reading and maintaining is not restricted.

For all of the above installations, any permanent structures such as furnaces, water heater, etc., must be installed so that access to the meter for reading and maintaining is not restricted.

2.25. ELECTRICAL CIRCUIT FOR REMOTE METER REGISTERS

The installation shall consist of a section of one-half inch (1/2") TW conduit attached to the outside of the building in a vertical position parallel to and twelve inches (12") to the side of the electrical house circuit. The conduit shall be attached to the house by corrosion resistant straps.

The top strap shall be approximately six inches (6") from the top end of the conduit.

The straps shall be fastened to the building with corrosion resistant screws.

On the lower end of the conduit shall be a condulet and a piece of one-half inch (1/2") TW conduit stubbed through the outside wall with plastic bushing.

The top end of the conduit shall be a minimum height of four feet (4') and a maximum height of five feet (5') from the finished ground level.

In cases of masonry construction, the top end of the conduit shall be one and three-quarters inches (1-3/4") below the center of a horizontal mortar joint.

All metallic materials shall be treated against rust and corrosion.

A three wire No. 22 wire shall be installed in the conduit and run parallel to and alongside of the ground wire from the electrical house circuit to the meter setting. The wire from the meter to the conduit shall be securely fastened to the building with insulated staples in a workmanlike manner.

The wire at the top of the conduit outside of the building shall extend out of the conduit a minimum of six inches (6") and a minimum of two feet (2') of wire shall be left at the meter setting.

A wood backing plate must be provided for the Remote Meter Reader location.

WATER SERVICE WILL NOT BE PROVIDED TO PREMISES UNTIL THE REQUIREMENTS OF THIS SECTION ARE COMPLIED WITH.

See Figures 2.26.1, 2.26.2 and 2.26.3 for remote meter reader settings and locations.

Residential and some non-residential meter sizes from 5/8" to 2" single register. Owner must install wire as shown leaving ample wire at point of inside meter and at ECR touch read system. The LCDU will make hookup of wire inside meter and attached ECR touch read system to the building.

III. TESTING

2.26. DISINFECTION

As previously specified, all pipe interiors shall be cleaned before laying and shall be kept clean thereafter. After a main has been completed it shall be disinfected in accordance with AWWA C651, "Disinfecting Water Mains", using the tablet or continuous feed method and the following:

For the tablet method, an average chlorine dose of 25 mg/l shall be provided by placing calcium hypochlorite granules in the main as it is being installed. Granules shall be placed at the upstream end of the first section of pipe, at the upstream end of each branch main, and at 500 feet intervals in the following quantities, based on pipe diameter:

PIPE DIAMETER (inches)	CALCIUM HYPOCHLORITE GRANULES (ounces)
4	0.5
6	1.0
8	2.0
10	3.0
12	4.0
16 and larger	8.0

When installation of the pipe is complete, the main shall be filled with potable water at a rate such that water within the main will flow at a velocity no greater than 1 fps. Precautions shall be taken to assure that air pockets are eliminated. The water shall remain in the pipe for at least 24 hours, except if the water temperature is less than 41°F, the water shall remain in the pipe for at least 48 hours.

For the continuous feed method, the main shall be flushed as thorough as possible with the water pressure and outlets available and all air exhausted. If no hydrant is installed at the end of the main, a tap large enough to develop a velocity in the main of at least 2.5 fps shall be provided by the Contractor. Disinfection can be accomplished by injecting a 1% chlorine solution (10,000 mg/1), prepared by mixing one pound of calcium hypochlorite (approximately 65% available chlorine by weight) and 8 gallons of water, into the main at a point not more than 10 feet downstream from the beginning of the new main. Potable water for the injector for delivering the 1% chlorine solution shall be pumped from a cleaned and sterilized container. Water from the existing distribution system or other approved potable water source shall be controlled so as to flow slowly into the new main during chlorine application, with the rate of chlorine application in such proportion to the rate of water entering the main that the solution of clean water and chlorine in the main will have not less than 25 mg/l free chlorine. The solution shall remain in the main for 24 hours, during which time all valves and hydrants in the treated section shall be operated to ensure disinfection of the appurtenances. At the end of this 24-hour period, the treated water in all portions of the main shall have a residual of not less than 10 mg/l free chlorine. Use only AWWA approved chlorine product stored in properly labeled containers.

During initial installation, a sufficient number of bacteria sampling and flushing assemblies shall be installed to conform specifications. Specifically, at least one set of samples shall be collected from every 1,200 ft. of the new water main, plus one set from the end of the main and at least one set from each branch. When the outside temperature is below freezing, the Contractor will protect the sampling and testing assemblies from freezing. Should a sampling assembly be frozen at the time a sample is needed, the Contractor will be required to thaw the assembly and will be charged for any additional County time required to take the sample.

When the water main is ready for filling, the Contractor will notify the LCDU to have the water main filled by the LCDU. The request must be made a minimum of 48 hours (2 working days) in advance. The LCDU will begin filling the water main within 48 hours (2 working days) of receiving notification. This procedure shall also be followed when the water main is ready for flushing.

The main shall be flushed until the Total Chlorine Residual is at 2.0 mg/l or less at each sampling point. Chlorine Residual testing will be performed by the LCDU.

The bleeder valve(s) and main valve supplying the section under test shall be closed, except during freezing weather, until the bacteriological sampling procedure commences.

Once construction of the water main has been completed, the Contractor shall locate and stake all main line and hydrant valve boxes. All valve boxes shall be made readily accessible. The Contractor shall provide personnel to assist with the filling and flushing of the water main(s). Filling and flushing of the water mains(s) shall be the responsibility of the LCDU. Once the water main(s) have been filled with water, <u>no one other than the LCDU's authorized personnel shall operate any bacteria sampling and flushing assemblies, valves or hydrants</u>.

Air shall be exhausted at fire hydrants, and 1 inch corporation stops for mains less than 12-inch diameter, and 2-inch corporation stops for mains 12-inch diameter and larger, inserted at the extremities and high points of the main to be used for bacteria sampling and flushing assemblies. The Contractor shall provide all corporation stops required for exhausting air, for samples for testing for chlorine residual, and for chlorine solution injection. In all cases, tests for chlorine residual will be performed by the LCDU.

During all flushing and disinfection operations, existing valves shall be manipulated so that strong chlorine solution in the main being treated will not flow back into the line supplying the water, and new valves and hydrants shall be operated so as to disinfect appurtenances and pipe branches.

Bacteriological samples shall not be taken for testing until the main has been subjected to a successful pressure and leakage test.

Disinfection is a responsibility of the Contractor, who shall provide all materials, labor and equipment and, in addition, pay for the total volume of water used and dispose of all heavily chlorinated water as approved by the LCDU. The Contractor shall pay all costs associated with the conveyance and treatment of the flushing and test waters. The Contractor is responsible for dechlorination of all waters flushed from super-chlorinated mains as per Ohio EPA regulations.

2.27. PRESSURE AND LEAKAGE TEST

Before the main has been disinfected and flushed out, the main and all service connections shall be subjected to a pressure and leakage test in accordance with AWWA C600 and the following:

The main shall be subject to pressure and leakage test in accordance with AWWA C600 before any service taps are made.

The main shall be isolated from adjacent main and pressure shall be applied by pumping clean water from a sterilized container into the main via 1-inch corporation stops. The test pressure shall be a minimum of 150 pounds per square inch (psi) or as required by the local Fire Department and shall not vary by more than +5 psi. Pressure testing shall be done before taps are made. The main shall be subject to pressure and leakage test in accordance with AWWA C600 before any service taps are made.

The pressure test shall be started in an afternoon and the pressure shall be on for two hours, and then, the test pressure shall be maintained for an additional two hours by pumping water from the container. At the end of the two-hour period, the water used shall be measured and the loss by leakage shall not exceed that as determined by the following formula:

$$L = \frac{SD\sqrt{P}}{133,200}$$

in which L is the allowable leakage in gallons per hour; S is the length of pipe tested in feet; D is the nominal diameter of the pipe in inches; and P is the average test pressure during the leakage test in pounds per square inch gauge.

When testing against closed metal-seated valves, an additional leakage per closed valve of 0.0078 gal/hr./in. of nominal valve size shall be allowed.

Tests shall be made against open hydrant valves against the hydrant foot valve.

Pressure testing at each side of the intermediate valves shall be done at this time by shutting each valve and exhausting the pressure on one side and then applying the test pressure of 150 psi or more to the main on the opposite side of the valve for approximately 10 minutes as determined by the LCDU. This procedure shall be repeated for each intermediate valve.

If the main and valves do not pass the leakage test, the leak or leaks shall be located and repaired and the testing procedure repeated by and at the expense of the Contractor. All visible leaks shall be repaired regardless of the amount of leakage.

Pressure and leakage testing is a responsibility of the Contractor, who shall provide all materials, labor and equipment and, in addition, pay for the total volume of water used.

2.28. BACTERIOLOGICAL TESTS

After the main has been disinfected and pressure tested, and before it is placed in service, bacteriological tests shall be performed in accordance with the following:

Samples will be collected by a representative of the LCDU only and bacteriological tests performed. Samples shall not be taken by the Contractor. Samples will be collected in accordance with AWWA C651 “Option A”, on passage of the first sample test the second sample will be analyzed. Upon both samples passing the tests, the water shall be deemed to be safe. At least one set of samples shall be collected from every 1,200 feet of the new water main, plus one set from the end of the line and at least one set from each branch. Samples shall only be collected at times and days as determined by the LCDU. Samples are not required on private lines 2-inch in diameter and smaller.

Before a sample is taken, the water shall be allowed to flow from the sampling point for at least one minute. The outlet shall be thoroughly flamed in order to kill all bacteria. Nothing should be allowed to touch the lip or top of the sample bottle while the sample is being taken. No hose or fire hydrant shall be used in the collection of samples.

If bacteriological tests show the water to be safe, the main may be placed in service, only after receiving a written confirmation from the LCDU. Upon receipt of written confirmation that the main has been placed in service, the Contractor shall immediately remove all “bacteria sampling and flushing assemblies”. The Contractor shall then either turn hydrants to face the proper direction, or remove bags from the hydrants designating that the water mains and hydrants are approved for County use. If bacteriological tests show the water to be unsafe, the main shall be completely disinfected and tested again at the expense of the Contractor.

The Contractor shall be responsible for all costs of bacteriological tests.

2.29. COMPLETION OF TESTS

When all tests on the water main have been successfully completed, the main will be placed in service by the LCDU and no further work on the main or its valves will be permitted without full knowledge of the work by the LCDU.

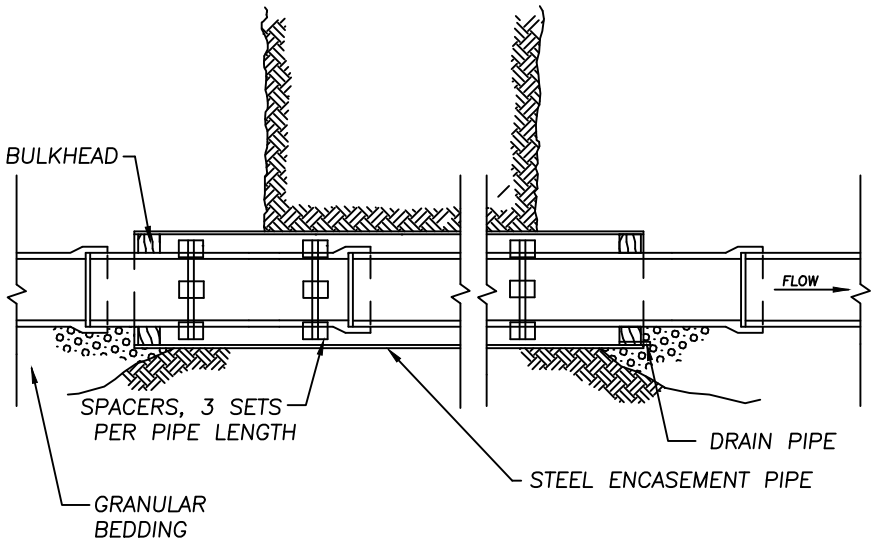

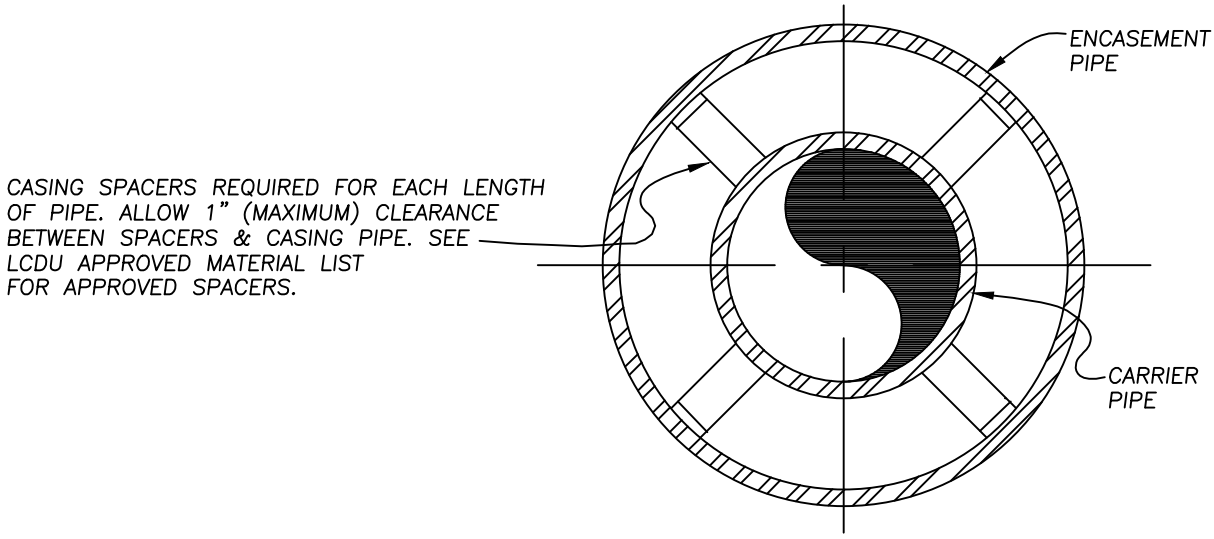

SECTION

NOTES:
1. WELD ALL ENCASEMENT PIPE JOINTS
2. MINIMUM THICKNESS FOR NEW CASING PIPE IS 3/8 INCHES. MINIMUM THICKNESS FOR USED CASING PIPE IS 1/2 INCHES. *1/2 IN. IS MIN. FOR R.R. BORES*
3. CASING DIAMETER SHALL BE A MINIMUM OF 6" GREATER THAN THE LARGEST O.D. OF THE CARRIER PIPE.
4. PROVIDE A 3/4" DRAIN PIPE AT THE BOTTOM OF THE DOWNSTREAM BULKHEAD.
5. CARRIER PIPE TO BE BOLTLESS RESTRAINT CL 56 PIPE.

WATER ONLY FIG 2.5.1

LAKE COUNTY DEPARTMENT OF UTILITIES		
BORING AND STEEL ENCASEMENT PIPE DETAILS		
DATE: 5-16	DRAWN BY: D.D.B.	SCALE: NONE

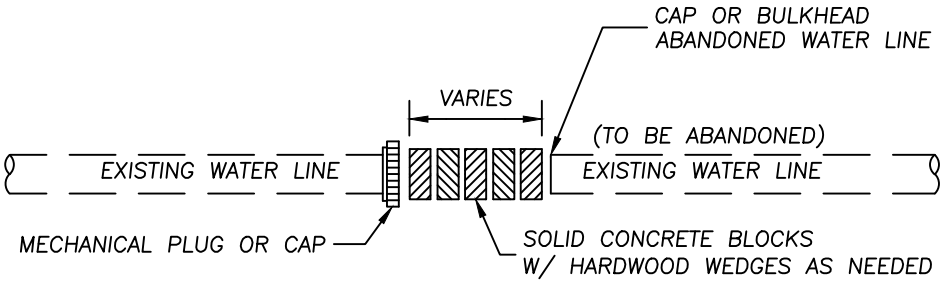

PLAN VIEW

FIG 2.5.2

LAKE COUNTY DEPARTMENT OF UTILITIES		
SOLID BLOCKING DETAIL FOR ABANDONED WATERLINES		
DATE: 5-16	DRAWN BY: DDB	SCALE: NONE

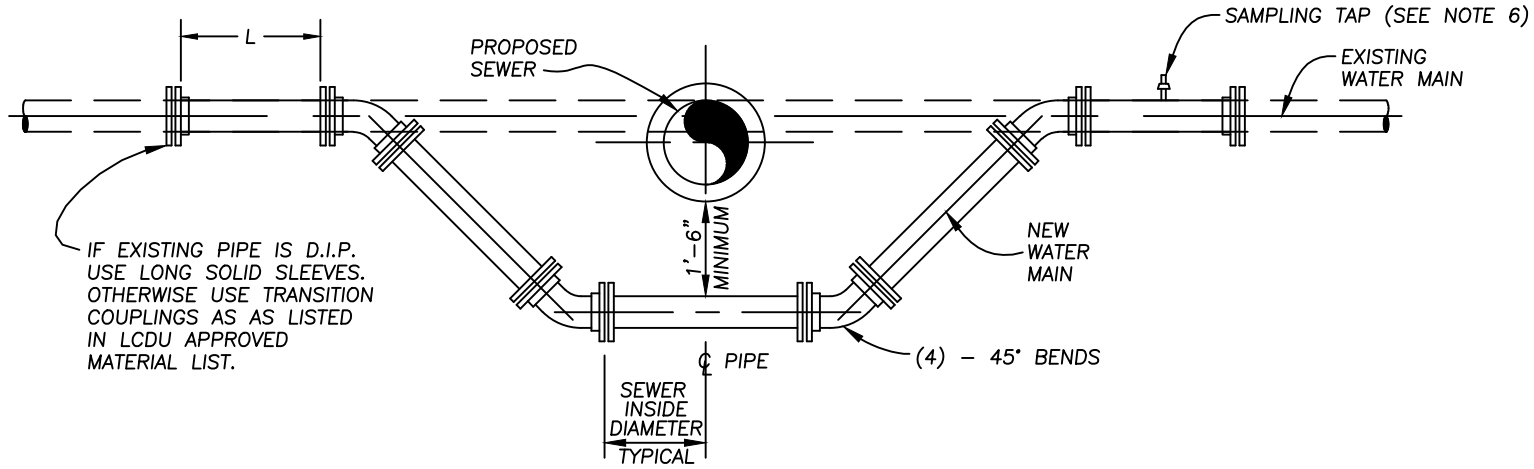

FOR 6" DIA PIPE L=12'
FOR 8" DIA PIPE L=16'
FOR 12" DIA PIPE L=23'
FOR 16" DIA PIPE L=32'

NOTES:
1. 24 HOUR ADVANCED NOTICE MUST BE GIVEN TO ALL AFFECTED RESIDENTS
2. DISINFECT PIPE PER AWWA STANDARDS
3. SEE CONTRACT DOCUMENTS FOR GENERAL NOTES & BEDDING DETAILS
4. RESTRAIN ALL JOINTS FOR ENTIRE LENGTH OF PIPE
5. PROVIDE 18" MINIMUM SEPARATION BETWEEN CROSSING PIPES
6. SAMPLING TAP REQUIRED IF THERE ARE NO HOUSES OR HYDRANTS FOR FLUSHING IN SHUT DOWN AREA (TAP TO BE ABANDONED AFTER TEST)
7. IF THE SPACE BETWEEN THE JOINT IS GREATER THAN 1/2-INCH AT ITS NARROWEST POINT, THEN A FULL-CIRCLE SPACER OR "DUTCHMAN" MUST BE CUT AND PLACED IN THE GAP BEFORE THE SLEEVE IS USED TO CLOSE THE JOINT.
8. THE "DUTCHMAN" SPACER SHALL BE CUT TO A WIDTH NO LESS THAN 1/4-INCH LESS THAN THE NARROWEST JOINT SPACE WIDTH.
9. EACH PIPE SPIGOT SHALL BE MARKED TO INDICATE THE POINT WHERE THE SLEEVE WILL BE PROPERLY CENTERED OVER THE POINT.

FIG 2.5.3

LAKE COUNTY DEPARTMENT OF UTILITIES		
WATER MAIN RELOCATION UNDER PROPOSED SEWER (TYP)		
DATE: 3-17	DRAWN BY: DDB	SCALE: NONE

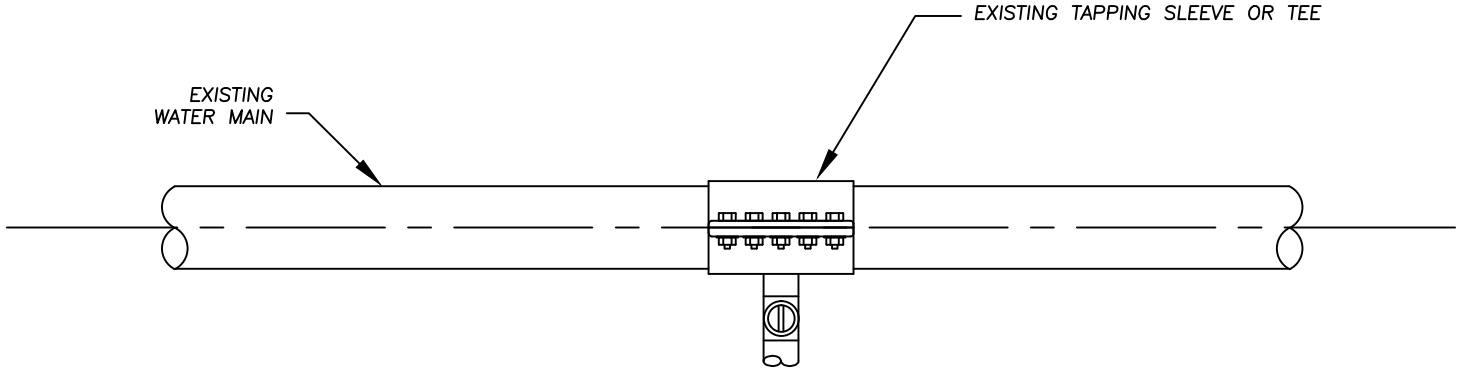

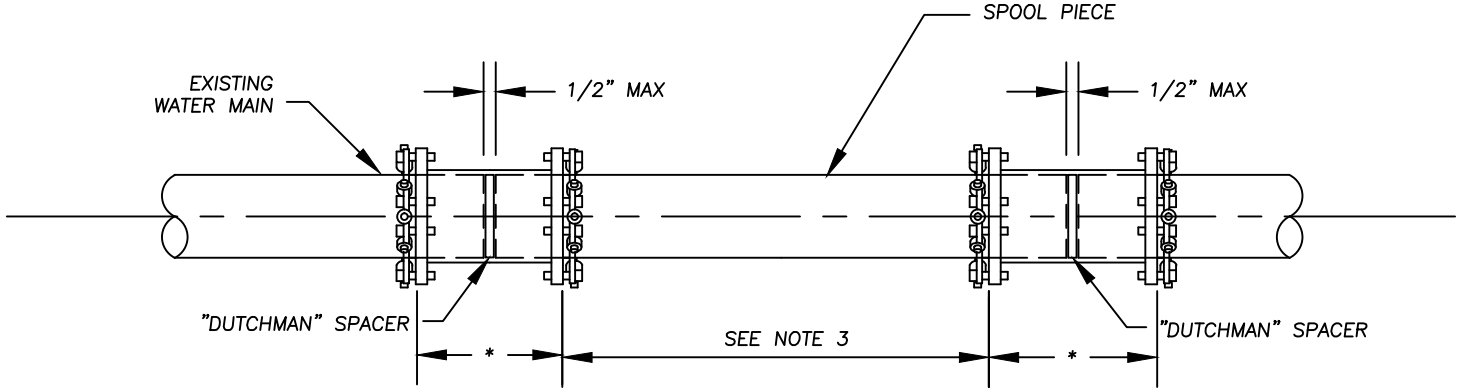

NOTES:

1. THE SIZE AND TYPE OF THE EXISTING WATER MAIN SHALL BE FIELD VERIFIED PRIOR TO CUTTING INTO THE EXISTING MAIN TO ENSURE CORRECT SOLID SLEEVE AND SPOOL PIECE SIZE.
2. NO CAST IRON FITTINGS SHALL BE PERMITTED.
3. REMOVE TAPPING SLEEVE AND SAW CUT TO REMOVE A MINIMUM 18 INCHES TO MAXIMUM 18 FOOT SECTION OF PIPE AND INSTALL CLASS 53 DIP SPOOL PIECE AS SHOWN.
4. * = CONNECTION SHALL BE MADE WITH RESTRAINED MECHANICAL JOINT SOLID SLEEVES (LONG PATTERN) DUCTILE IRON CLASS 350, OR DRESSER COUPLINGS IF DISSIMILAR PIPE. INSTALL DUTCHMAN IN GAPS AS NEEDED. ALL FASTENERS TO BE STAINLESS STEEL.
5. ALL MATERIALS TO CONFORM TO THE LCDU APPROVED MATERIAL LIST.
6. FITTINGS TO BE SUPPORTED BY SOLID CONCRETE BLOCKING WITH HARD WOOD SHIMS AS NEEDED.
7. IF THE SPACE BETWEEN THE JOINT IS GREATER THAN 1/2-INCH, THEN A FULL CIRCLE SPACER OR "DUTCHMAN" MUST BE CUT AND PLACED IN THE GAP BEFORE THE SLEEVE IS USED TO CLOSE THE JOINT.
8. THE "DUTCHMAN" SPACER SHALL BE CUT TO A WIDTH NO LESS THAN 1/4-INCH LESS THAN THE NARROWEST JOINT SPACE WIDTH.
9. EACH PIPE SPIGOT SHALL BE MARKED TO INDICATE THE POINT WHERE THE SLEEVE WILL BE PROPERLY CENTERED OVER THE POINT.

FIG 2.5.4

LAKE COUNTY DEPARTMENT OF UTILITIES		
ABANDONMENT DETAIL FOR TAPPING SLEEVE OR TEE		
DATE: 3-17	DRAWN BY: DDB	SCALE: NONE

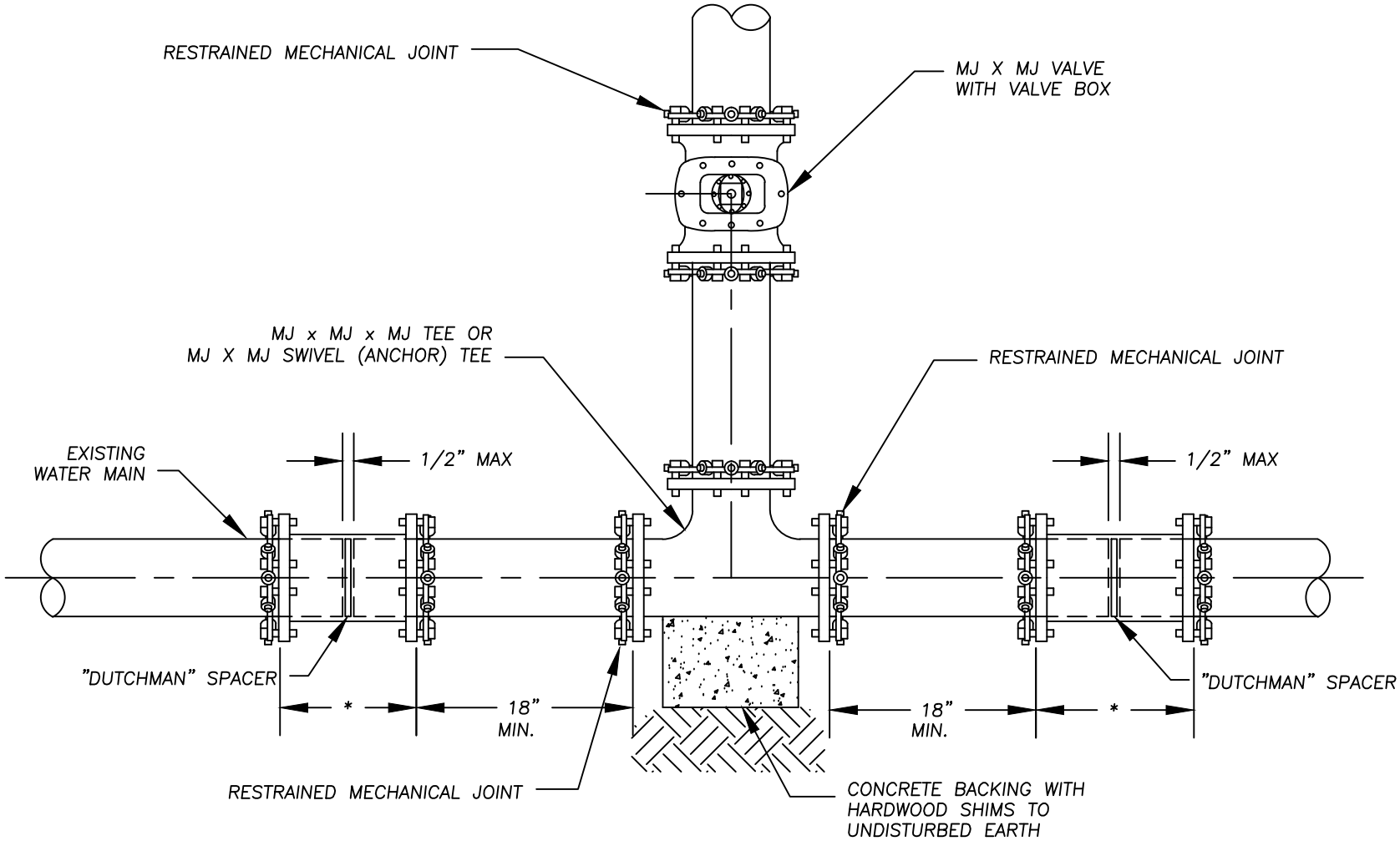

NOTES:

1. THE SIZE AND TYPE OF THE EXISTING WATER MAIN SHALL BE FIELD VERIFIED PRIOR TO CUTTING INTO THE EXISTING MAIN TO ENSURE CORRECT SOLID SLEEVE SIZE.
2. NO CAST IRON FITTINGS SHALL BE PERMITTED.
3. * = CONNECTION SHALL BE MADE WITH RESTRAINED MECHANICAL JOINT SOLID SLEEVES (LONG PATTERN) DUCTILE IRON CLASS 350.
4. ALL MATERIALS TO CONFORM TO THE LCDU APPROVED MATERIAL LIST.
5. FITTINGS TO BE SUPPORTED BY SOLID CONCRETE BLOCKING WITH HARD WOOD SHIMS AS NEEDED.
6. IF THE SPACE BETWEEN THE JOINT IS GREATER THAN 1/2-INCH, THEN A FULL CIRCLE SPACER OR "DUTCHMAN" MUST BE CUT AND PLACED IN THE GAP BEFORE THE SLEEVE IS USED TO CLOSE THE JOINT.
7. THE "DUTCHMAN" SPACER SHALL BE CUT TO A WIDTH NO LESS THAN 1/4-INCH LESS THAN THE NARROWEST WIDTH OF THE JOINT.
8. EACH PIPE SPIGOT SHALL BE MARKED TO INDICATE THE POINT WHERE THE SHEEVE WILL BE PROPERLY CENTERED OVER THE POINT.

FIG 2.6.2

LAKE COUNTY DEPARTMENT OF UTILITIES		
CUT-IN DETAIL WITH VALVE		
DATE: 3-17	DRAWN BY: DDB	SCALE: NONE

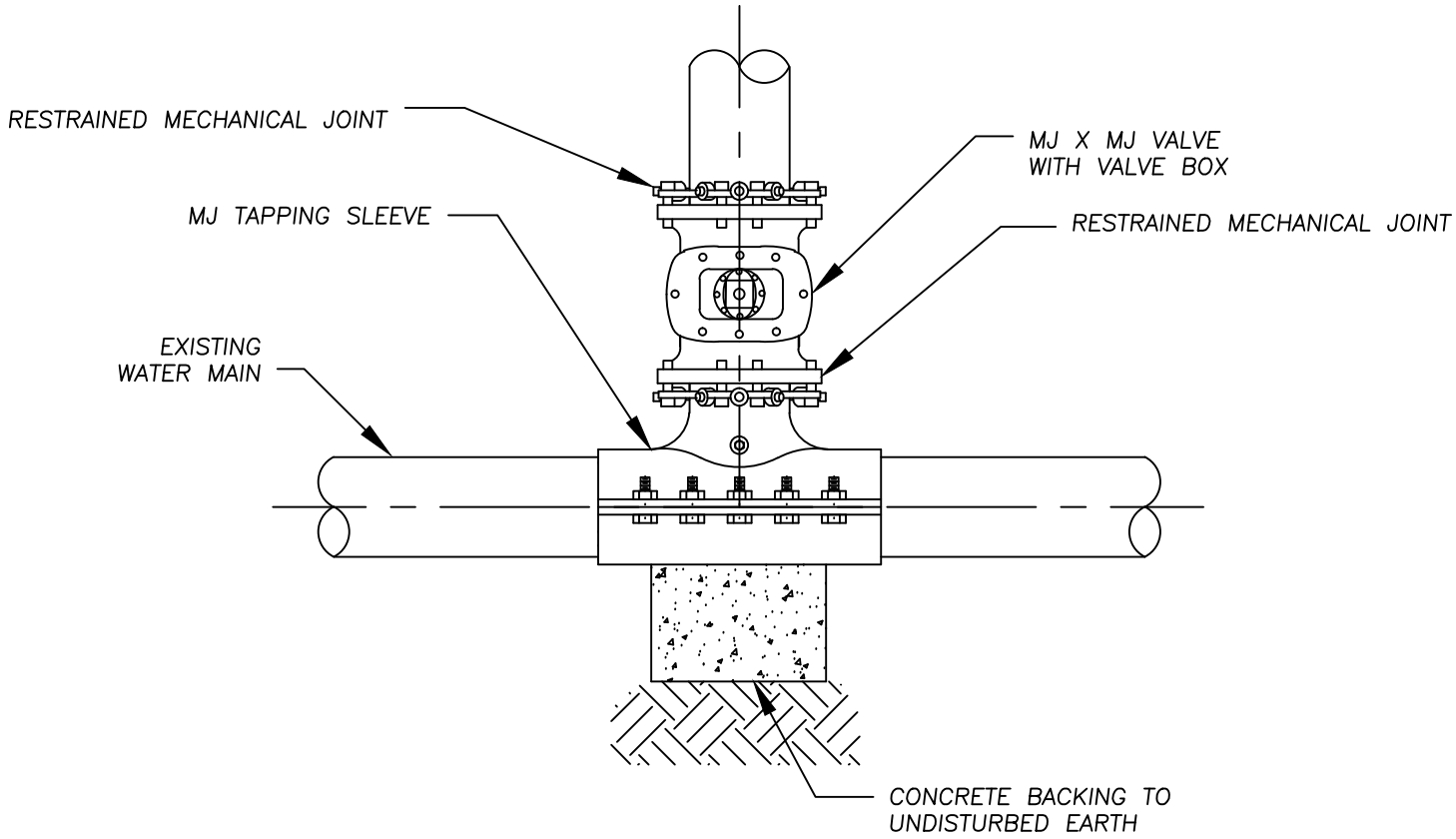

NOTES:
THE SIZE AND TYPE OF THE EXISTING WATER MAIN SHALL BE FIELD VERIFIED PRIOR TO CUTTING INTO THE EXISTING MAIN TO ENSURE CORRECT SOLID SLEEVE SIZE.
NO CAST IRON FITTINGS SHALL BE PERMITTED.
* = CONNECTION SHALL BE MADE WITH RESTRAINED MECHANICAL JOINT SOLID SLEEVES (LONG PATTERN) DUCTILE IRON CLASS 350.
ALL MATERIALS TO CONFORM TO THE LCDU APPROVED MATERIAL LIST.

FIG 2.6.3

LAKE COUNTY DEPARTMENT OF UTILITIES		
M.J. TAPPING SLEEVE & VALVE		
DATE: 10-09	DRAWN BY: D.D.B.	SCALE: NONE

MAXIMUM VERTICAL DISTANCE BETWEEN TOP OF BLOW-OFF STAND-PIPE AND TOP OF BOX SHALL BE 6 INCHES

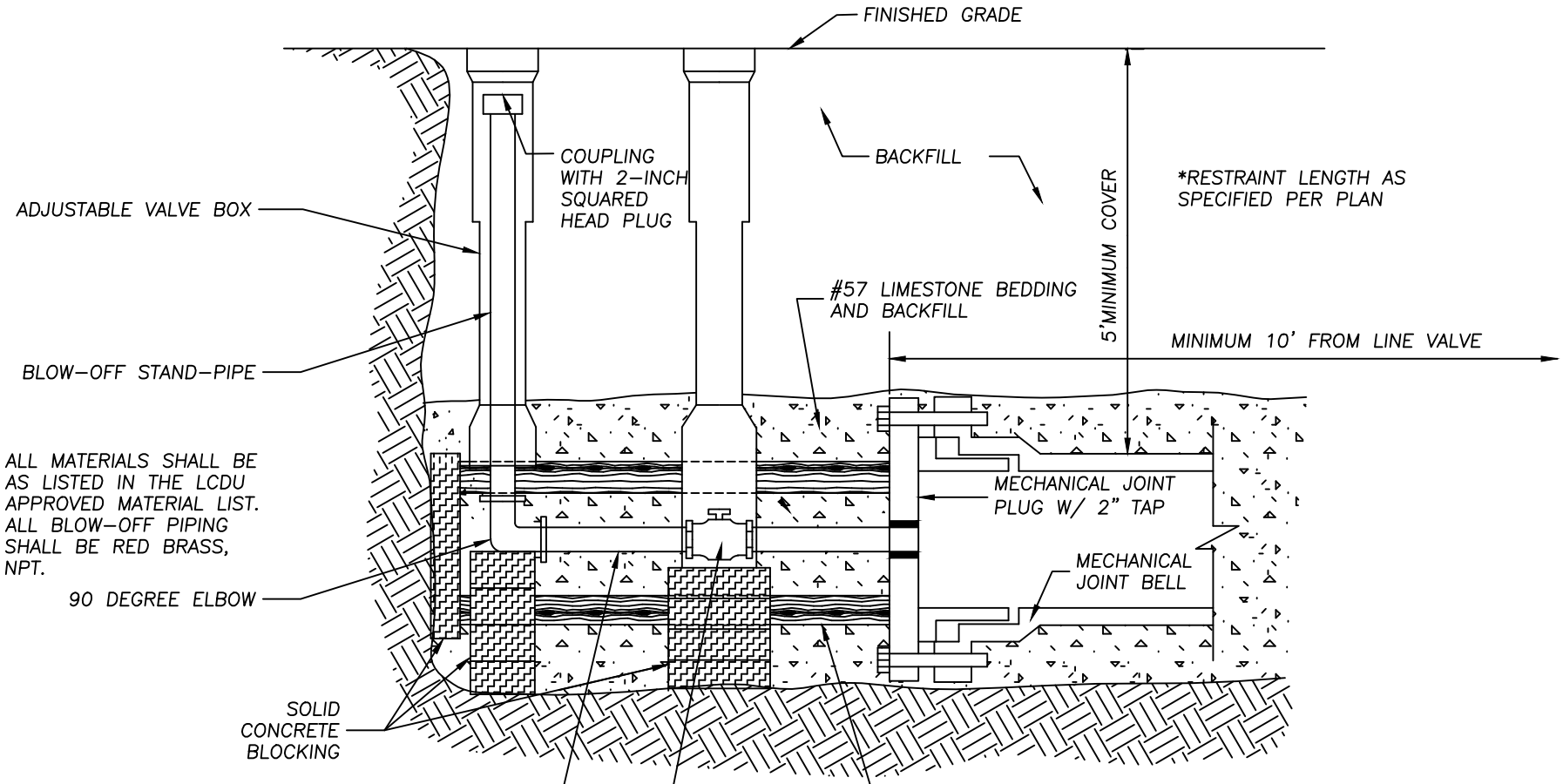

ALL MATERIALS SHALL BE AS LISTED IN THE LCDU APPROVED MATERIAL LIST. ALL BLOW-OFF PIPING SHALL BE RED BRASS, NPT.

NOTE: BLOW-OFF STAND-PIPE TO BE PUMPED DRY FOLLOWING EACH USE.

FIG 2.11.1

LAKE COUNTY DEPARTMENT OF UTILITIES		
FLUSHING ASSEMBLY		
DATE: 5-16	DRAWN BY: DDB	SCALE: NONE

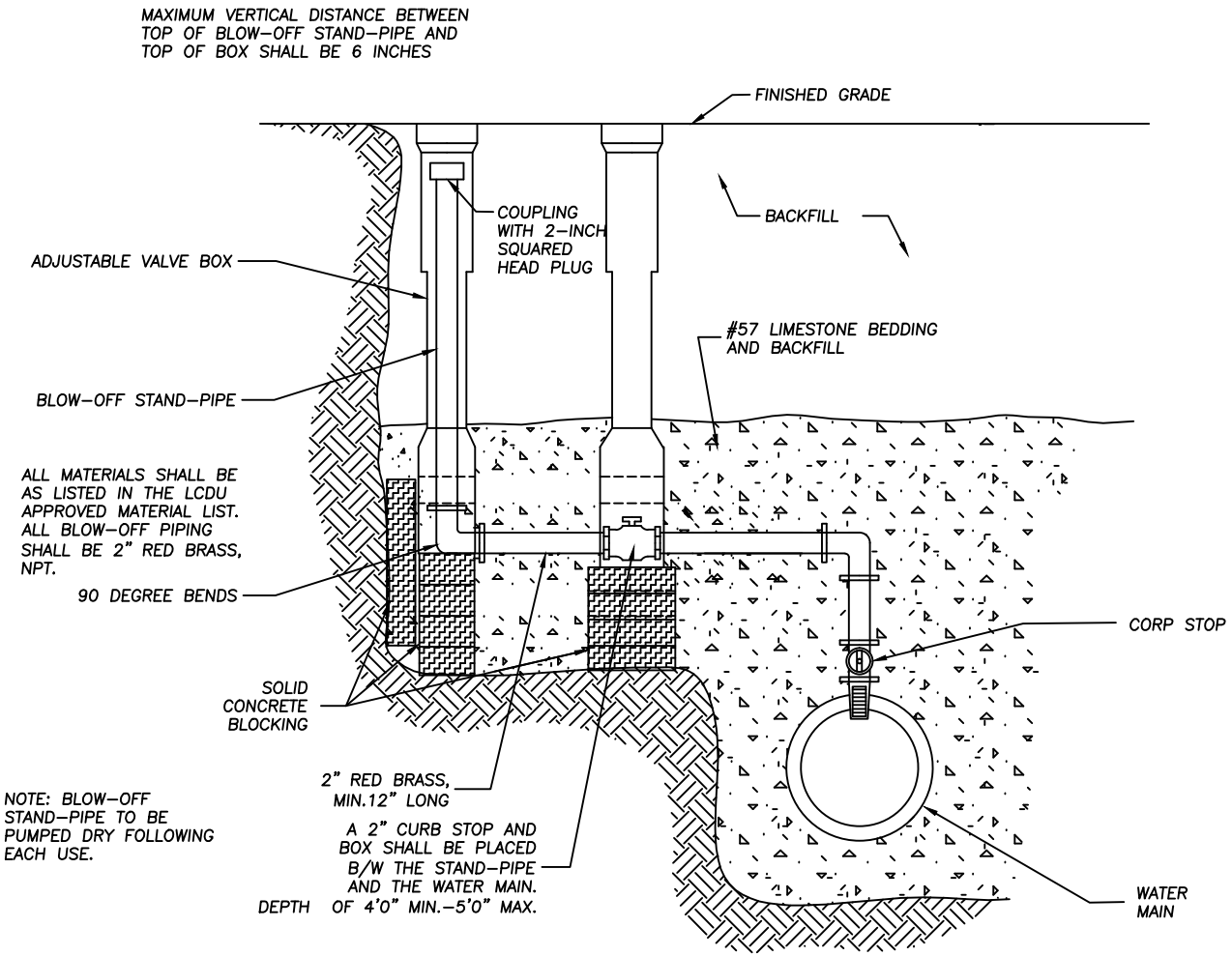

FIG 2.11.2

LAKE COUNTY DEPARTMENT OF UTILITIES		
BLOW-OFF ASSEMBLY		
DATE: 8-17	DRAWN BY: DDB	SCALE: NONE

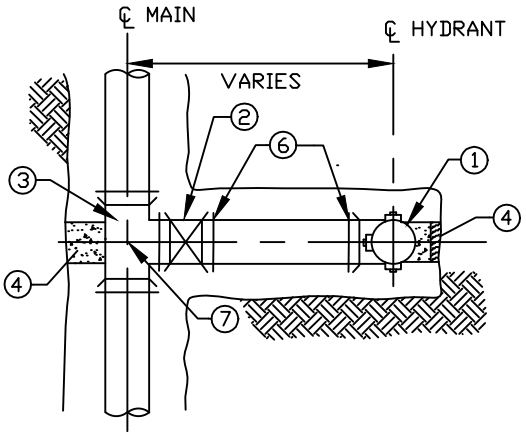

TYPE "A" HYDRANT ASSEMBLY

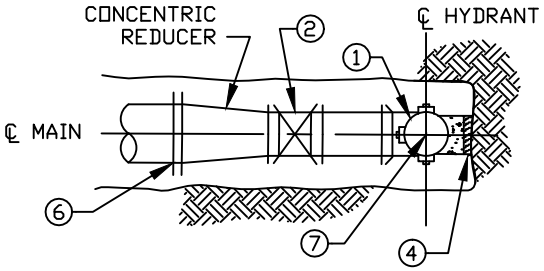

TYPE "C" HYDRANT ASSEMBLY

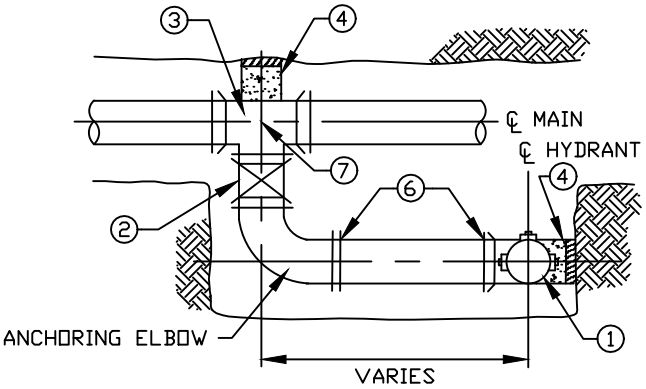

TYPE "B" HYDRANT ASSEMBLY

1. HYDRANT, PER SPECIFICATIONS
2. 6" GATE VALVE
3. SWIVEL ANCHORING TEE OR MJ X MJ X MJ TEE
4. CONCRETE BLOCKING WITH OAK WEDGES AGAINST UNDISTURBED EARTH
5. CONCRETE SUPPORT BLOCKING
6. JOINT RESTRAINT, (TYP. TEE TO HYDRANT)
7. PLAN STATION AND OFFSET

NOTE: ALL MATERIALS SHALL BE AS LISTED IN THE LCDU APPROVED MATERIAL LIST

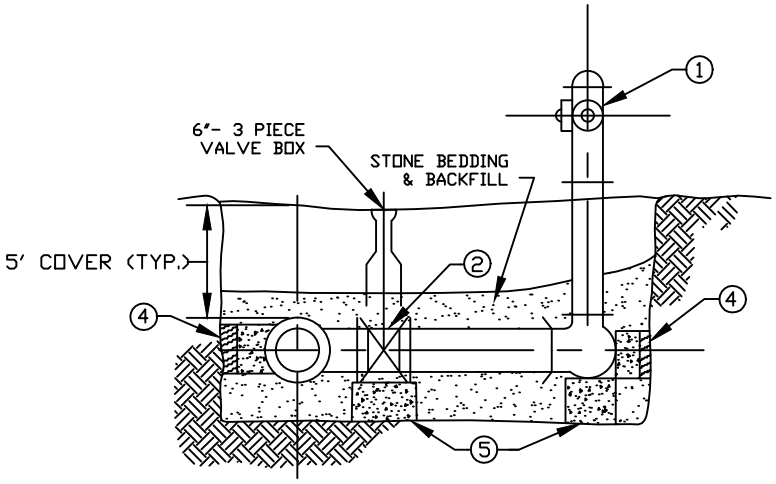

TYPICAL HYDRANT ASSEMBLY
ELEVATION

FIG 2.12.1

LAKE COUNTY DEPARTMENT OF UTILITIES		
HYDRANT DETAILS		
DATE: 5-16	DRAWN BY: D.D.B.	SCALE: NONE

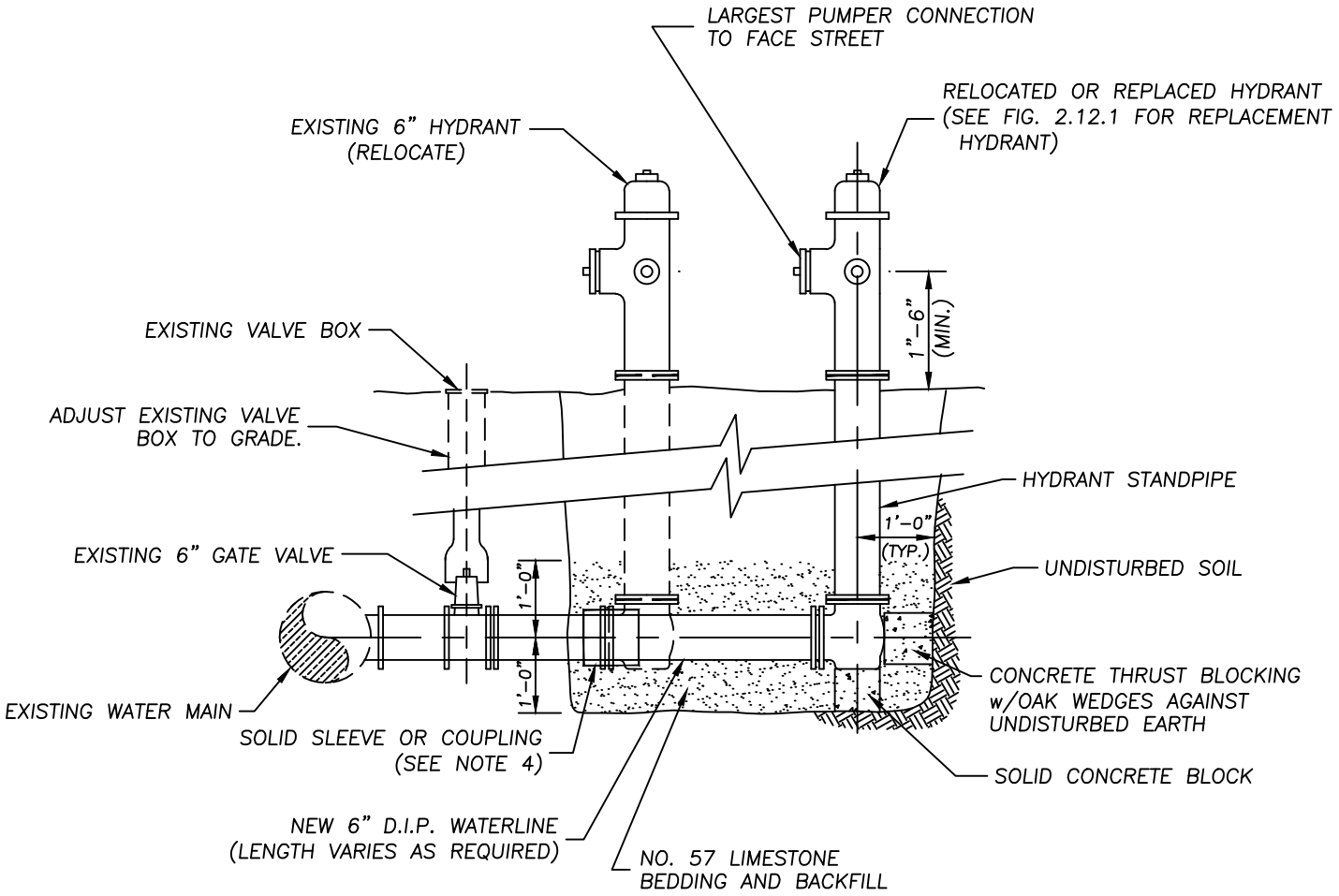

NOTES:

1. THE CONTRACTOR SHALL CAREFULLY REMOVE THE EXISTING HYDRANT, EXTEND THE 6" WATERLINE AND INSTALL THE RELOCATED FIRE HYDRANT AT THE LOCATION CALLED OUT ON THE PLANS. ALL NEW WATERLINE MATERIAL AND FITTINGS SHALL BE PER LAKE COUNTY WATER DEPARTMENT STANDARDS.
2. ALL COSTS ASSOCIATED WITH THIS WORK INCLUDING EXCAVATION; GRANULAR BACKFILL; FITTINGS; NUTS; BOLTS; ZINC PROTECTO CAPS; HYDRANT INLET PIPE AND EXTENSION; DEWATERING;SHEETING OR SHORING; PIPE BEDDING AND PIPE BACKFILL; DISPOSAL OF WASTE MATERIALS; PROTECTION OF STRUCTURES, UTILITIES, SERVICE CONNECTIONS OR OTHER FACILITIES; THRUST BLOCKING; JOINT RESTRAINTS; TESTING; FLUSHING; STERILIZING; AND PAINTING ALL HYDRANTS, TOGETHER WITH ALL LABOR, EQUIPMENT, TOOLS AND MATERIALS NECESSARY TO COMPLETE THE WORK AS SHOWN, SPECIFIED, OR AS DIRECTED BY THE ENGINEER SHALL BE THE CONTRACTOR'S RESPONSIBILITY.
3. ALL MATERIALS SHALL BE AS LISTED ON THE LCDU APPROVED MATERIAL LIST.
4. ALL COUPLINGS SHALL BE PROPERLY SPECIFIED FOR CONNECTING DISSIMILAR MATERIALS.
5. PROVIDE SOLID CONCRETE BLOCKING WITH HARD WOOD SHIMS UNDER ALL FITTINGS.
6. ALL FITTINGS TO BE FULLY RESTRAINED.
7. IF THE EXISTING HYDRANT IS OF THE LEAD JOINT TYPE, IT WILL BE REMOVED AND REPLACED.

FIG 2.12.4

LAKE COUNTY DEPARTMENT OF UTILITIES		
HYDRANT REMOVED AND RELOCATED OR REPLACED		
DATE: 5-16	DRAWN BY: DDB	SCALE: NONE

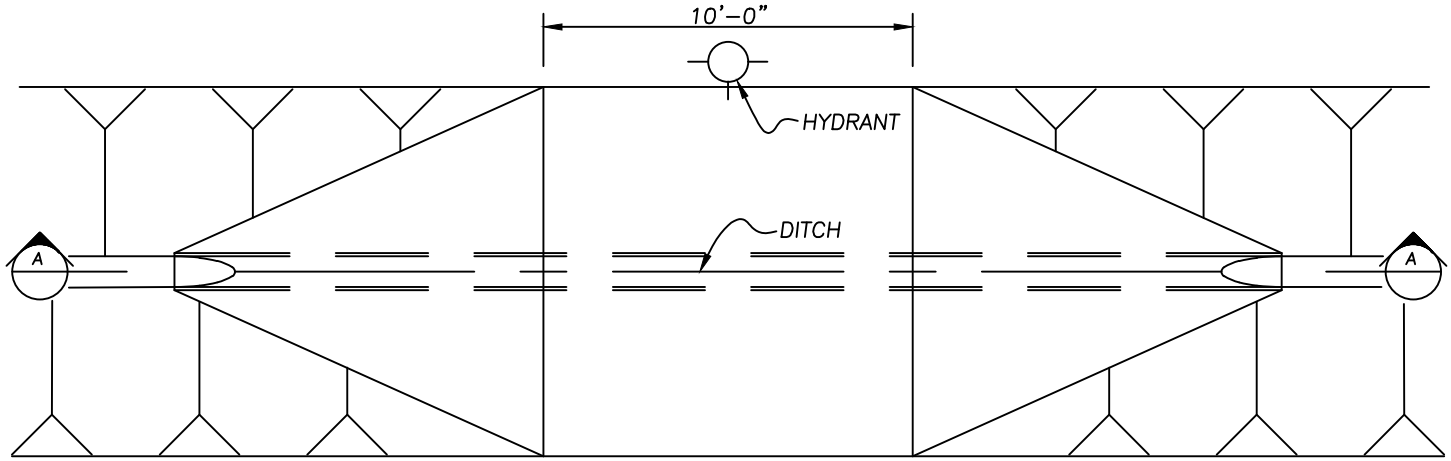

EDGE OF PAVEMENT

PLAN

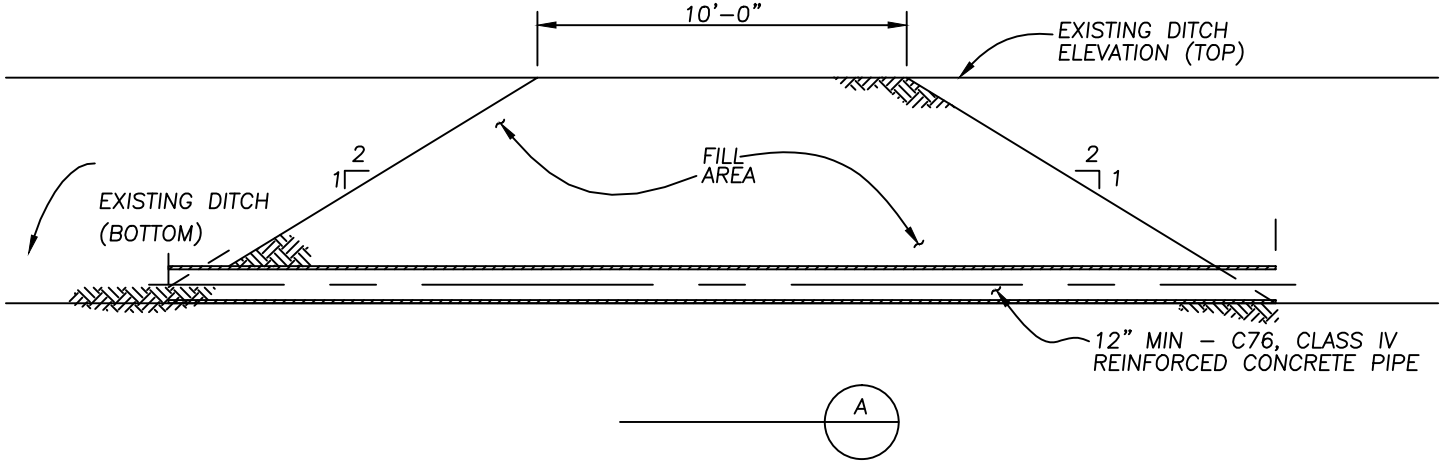

FIG 2.12.5

NOTES:
1. CENTER CULVERT AT FIRE HYDRANT LOCATIONS AS SHOWN ON PLANS.
2. CULVERT SIZE TO ME APPROVED BY THE COUNTY ENGINEER OR THE MUNICIPAL ENGINEER HAVING JURISDICTION OVER THE DRAINAGE AREA.
3. SEE FIG 2.22.1 FOR FILL REQUIREMENTS.

LAKE COUNTY DEPARTMENT OF UTILITIES		
HYDRANT APPROACH AT DRAINAGE DITCH		
DATE: 10–09	DRAWN BY: DDB	SCALE: NONE

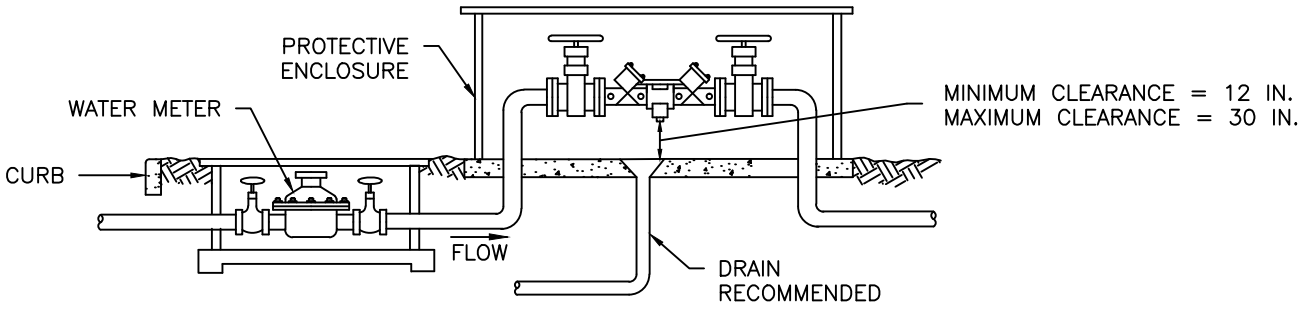

OUTSIDE INSTALLATION

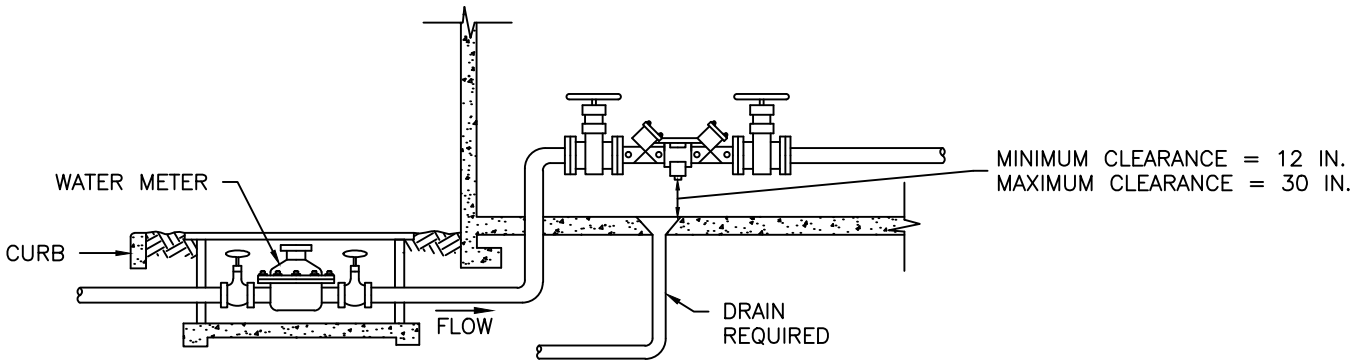

INSIDE BUILDING INSTALLATION

NOTE:
THE INLET GATE VALVE MUST HAVE A TEST PORT ON IT REGARDLESS OF INSTALLATION TYPE.

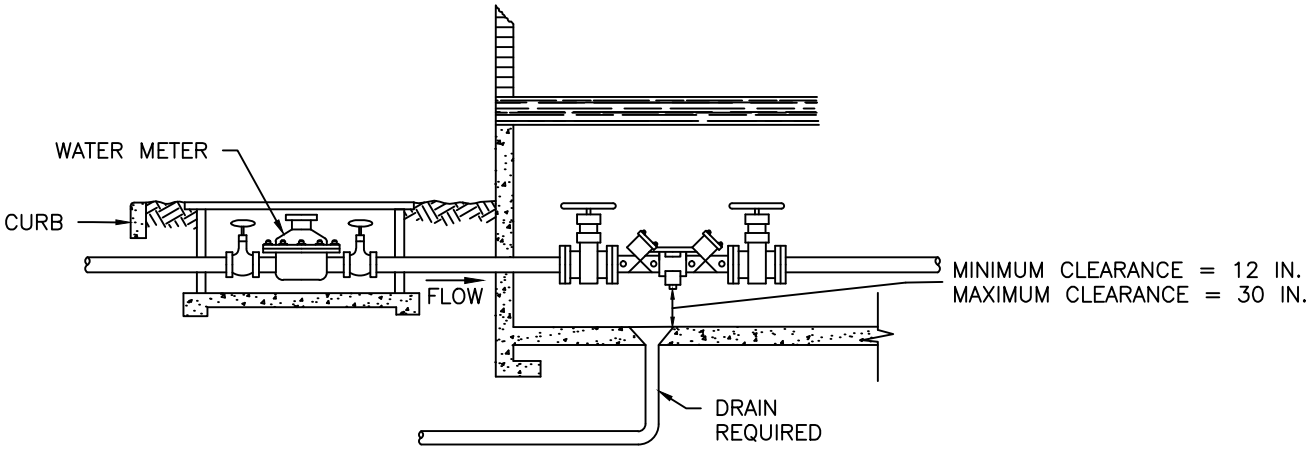

IN BASEMENT INSTALLATION

FIG 2.13.1

LAKE COUNTY DEPARTMENT OF UTILITIES		
REDUCED PRESSURE BACKFLOW PREVENTER INSTALLATION		
DATE: 6–16	DRAWN BY: D.D.B.	SCALE: NONE

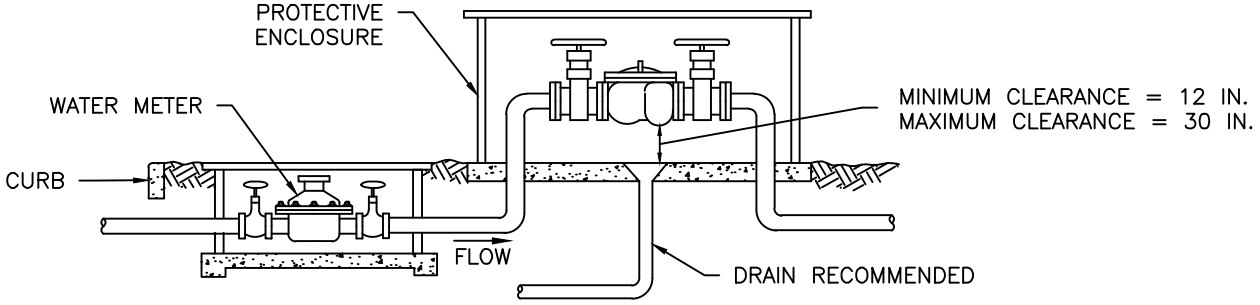

OUTSIDE INSTALLATION

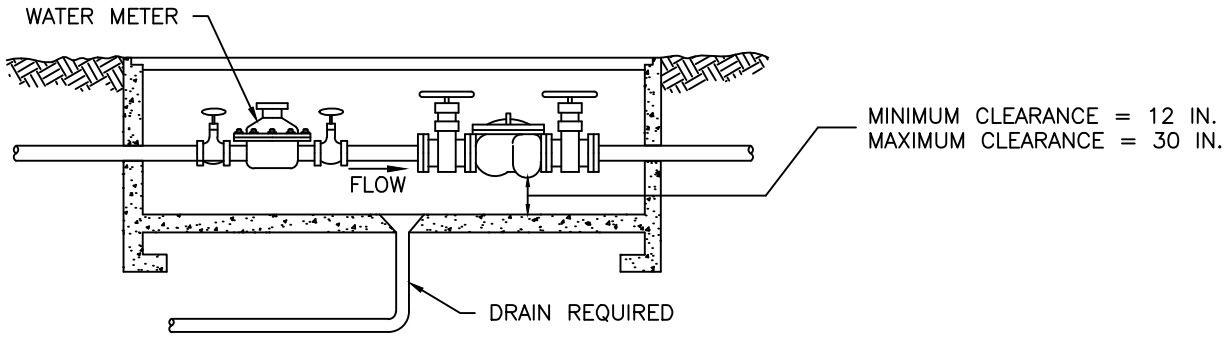

METER PIT OR VAULT INSTALLATION

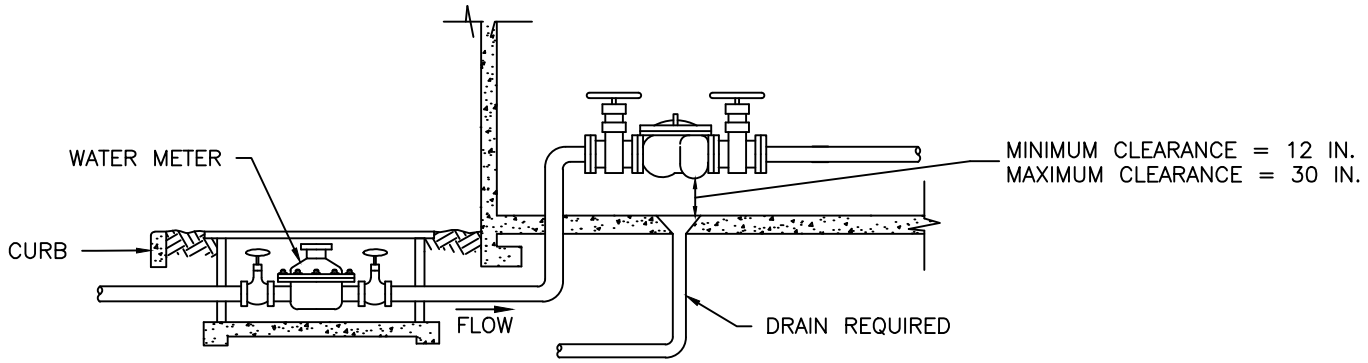

INSIDE BUILDING INSTALLATION

NOTE:
THE INLET GATE VALVE MUST HAVE A TEST PORT ON IT REGARDLESS OF INSTALLATION TYPE.

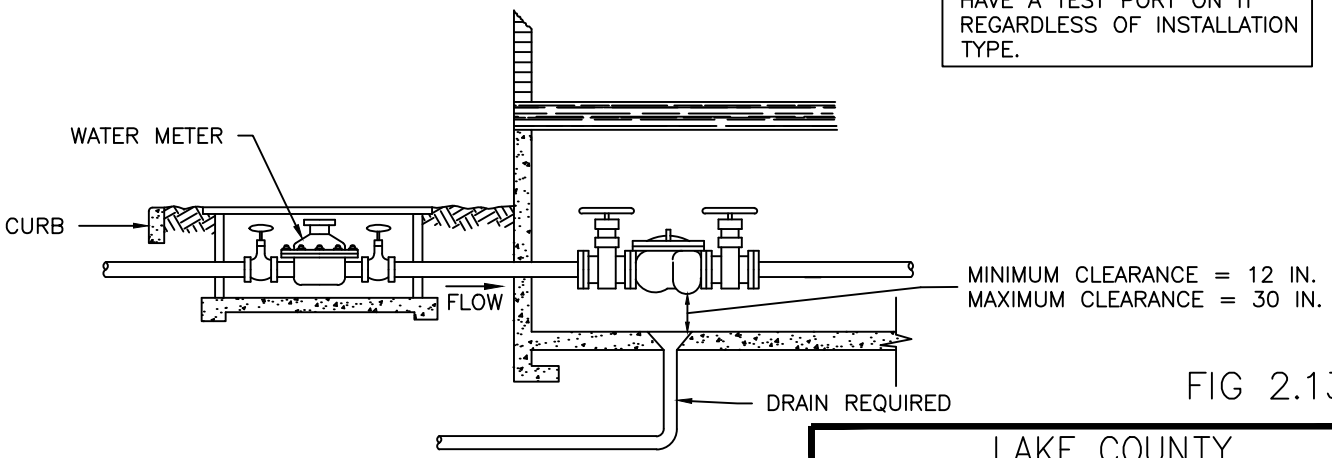

IN BASEMENT OR VAULT INSTALLATION

FIG 2.13.2

LAKE COUNTY DEPARTMENT OF UTILITIES		
DOUBLE CHECK VALVE ASSEMBLY INSTALLATION		
DATE: 6–16	DRAWN BY: –	SCALE: NONE

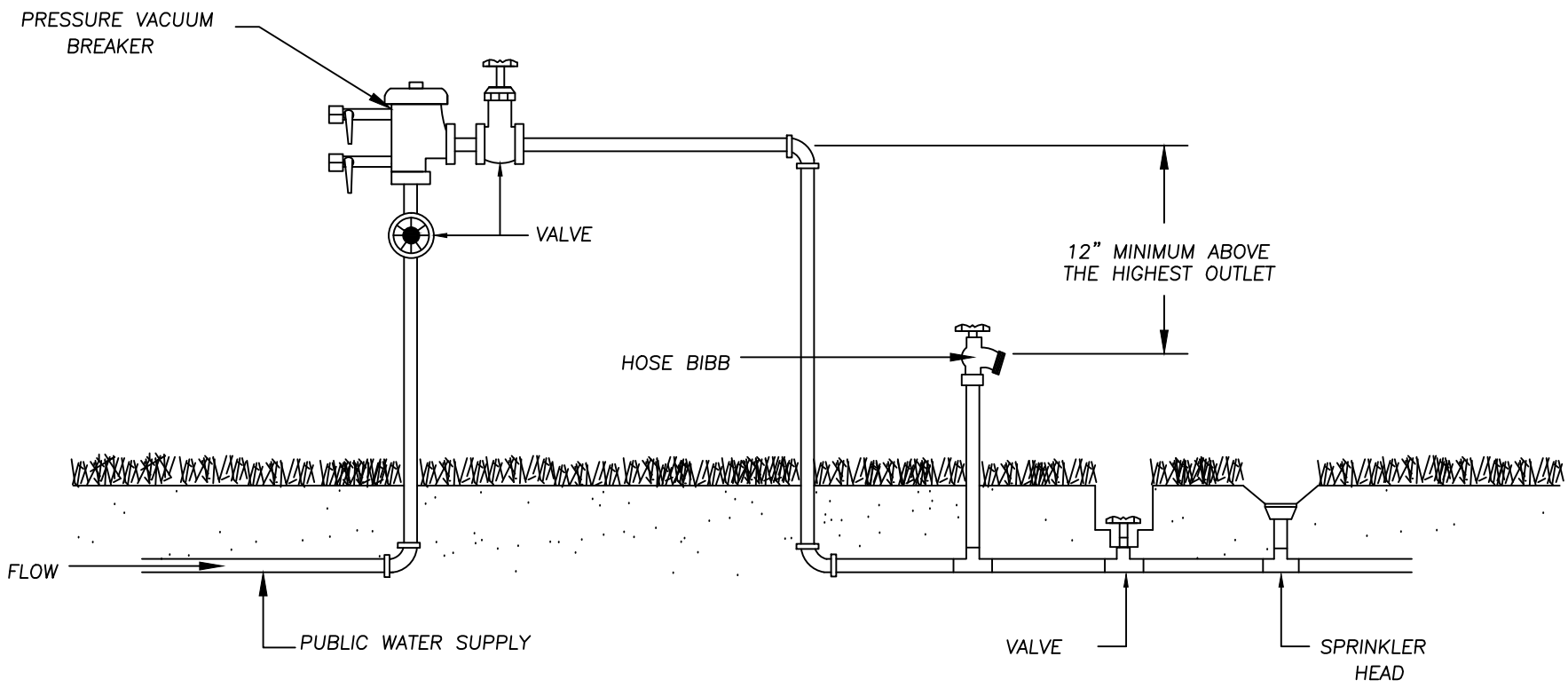

NOTE: HOSE BIBB IS ALSO FOR WINTERIZATION DRAINING

FIG 2.13.3

LAKE COUNTY DEPARTMENT OF UTILITIES		
PRESSURE VACUUM BREAKER		
DATE: 08–03	DRAWN BY:–	SCALE: NONE

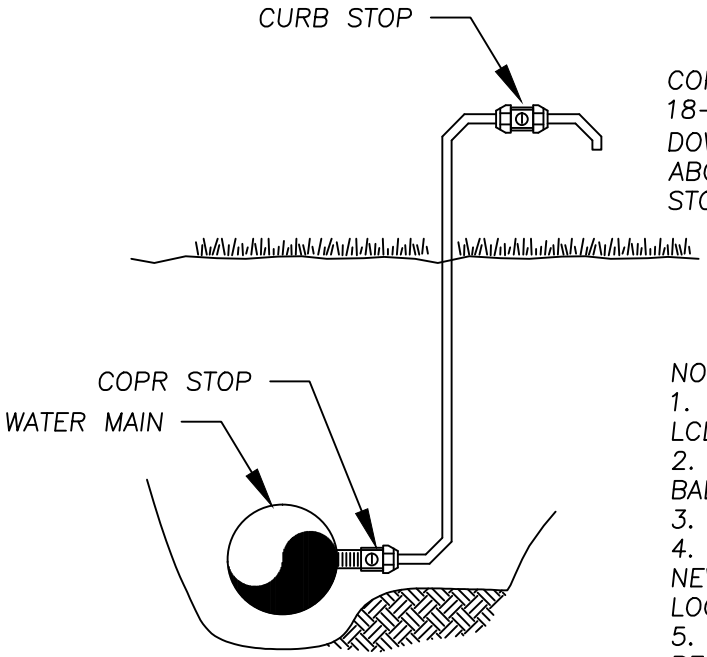

COPPER–TUBE EXTENSION SHOULD EXTEND AT LEAST 18–INCHES PAST THE CURB STOP, BE BENT AT A DOWNWARD ANGLE AND TERMINATE AT LEAST 3'–0" ABOVE GRADE LEVEL. PIPE OUTLET TO DITCH OR STORM SEWER SYSTEM.

NOTES:
1. CURB STOP MUST BE EASILY ACCESSIBLE TO LCDU PERSONNEL FOR SAMPLING.
2. THE CURB STOP CAN BE SUBSTITUTED WITH A BALL VALVE.
3. PLUG CORPORATION STOP AFTER TESTING.
4. SAMPLING POINT REQUIRED EVERY 1200 LF OF NEW WATERLINE AND AT ANY DEAD END. LOCATIONS TO BE DETERMINED BY LCDU.
5. COPPER TUBE AND CURB STOP SHALL BE REMOVED AY THE CORP STOP IN THE MAIN BY THE CONTRACTOR, WHEN AND AS DIRECTED BY LCDU, AFTER THE MAIN HAS PASSED ALL REQUIRED BACTERIOLOGICAL TESTING.

FIG 2.14.1

LAKE COUNTY DEPARTMENT OF UTILITIES		
BACTERIA SAMPLING DETAIL		
DATE: 6–16	DRAWN BY: DDB	SCALE: NONE

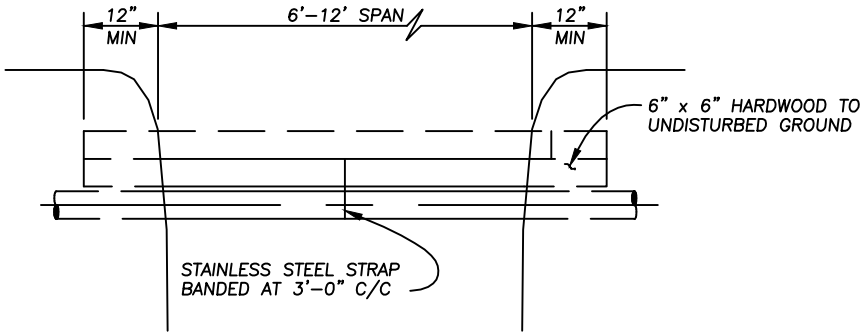

1 – 6" x 6" HARDWOOD SUPPORT UP TO 8' SPAN.
2 – 6" x 6" HARDWOOD SUPPORT UP TO 12' SPAN.

SECTION

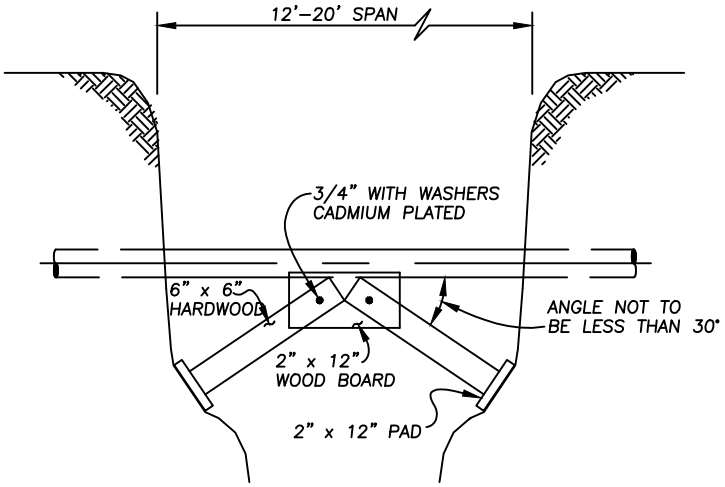

SECTION

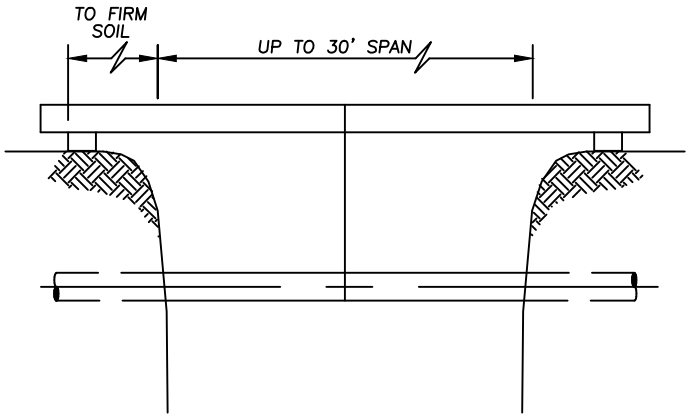

SECTION

FOR SPANS UP TO 12' A 6" x 6" TIMBER MAY BE USED.
OVER 12' USE A CLASS 4 OR BETTER UTILITY POLE. (ACCEPTABLE ALTERNATES INCLUDE 6" –.219" WALL PIPE OR 6" x 3 I – BEAM.)
BACKFILL MUST BE COMPLETELY COMPACTED OR PERMANENT SUPPORTS INSTALLED, OR NATURAL SETTLEMENT COMPLETE PRIOR TO REMOVING EXPOSED SUPPORTS.
THIS METHOD OF SUPPORT IS TO BE USED FOR 6" AND 8" WATER MAINS ONLY.

THIS SYSTEM MAY BE USED FOR LONGER SPANS (UP TO 30') BY USE OF 6" x 6" CENTER TIMBER.

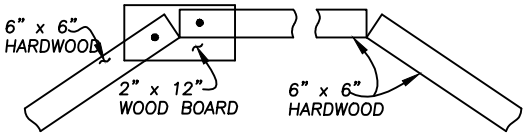

FIG 2.19.1

LAKE COUNTY DEPARTMENT OF UTILITIES		
SUPPORT OF WATER UTILITIES PERPENDICULAR TO EXCAVATION		
DATE: 09–10	DRAWN BY: D.D.B.	SCALE: NONE

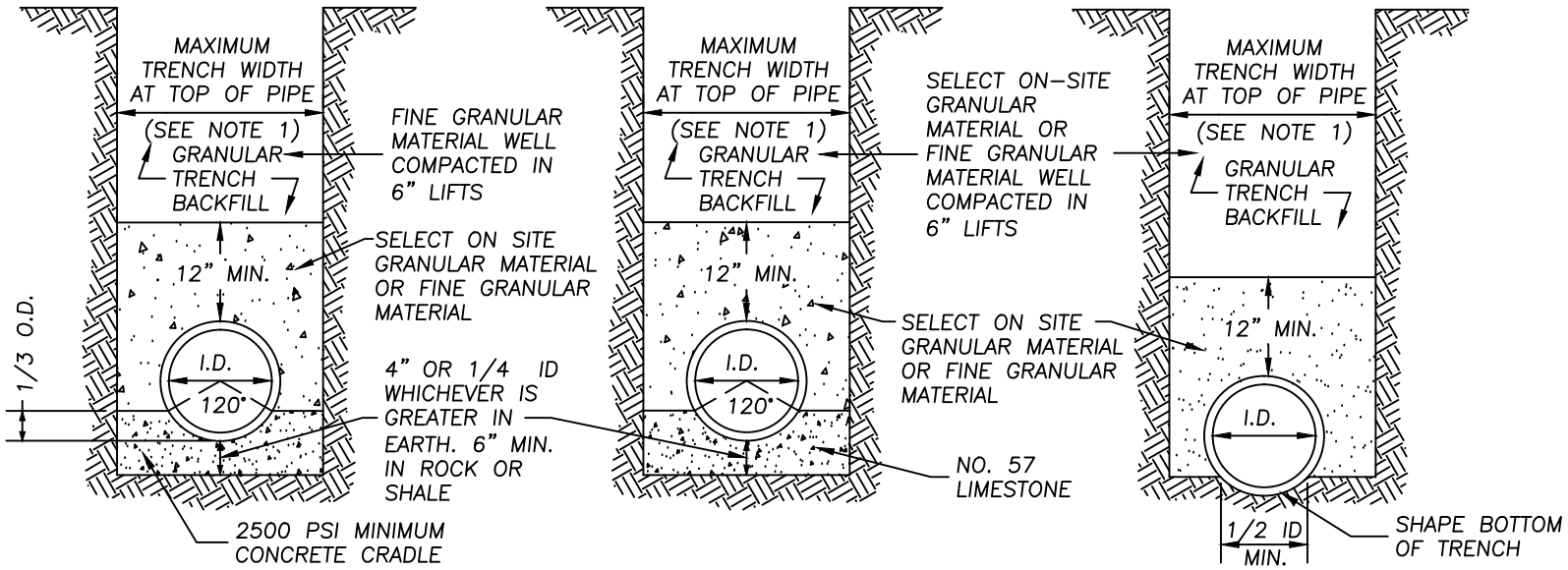

NOTES:

1. MAXIMUM TRENCH WIDTH AT TOP OF PIPE SHALL BE O.D. +24" FOR ALL PIPE SIZES UP TO AND INCLUDING 24" I.D., AND O.D. +30" FOR PIPE LARGER THAN 24" I.D.
2. GRANULAR TRENCH PIPE BACKFILL UNDER PAVEMENT AND STRUCTURES SHALL BE ODOT 304 LIMESTONE COMPACTED TO TOP OF TRENCH. SEE SECTION 1.24 FOR COMPACTION REQUIREMENTS. THE BACKFILL MATERIAL SHALL EXTEND A MINIMUM OF 3-FEET BEYOND EACH EDGE OF PAVEMENT OR STRUCTURE. IN AREAS OUTSIDE OF PAVEMENT, SELECT ON-SITE GRANULAR MATERIAL APPROVED BY LAKE COUNTY SANITARY ENGINEER MAY BE USED IN LIFTS NOT TO EXCEED 6-INCHES FOR PIPE BACKFILL ABOVE BEDDING.
3. ALL BEDDING SHALL BE CLASS "C" UNLESS OTHERWISE NOTED ON THE PLANS OR REQUIRED BY THE SANITARY ENGINEER.
4. SLAG SHALL NOT BE USED FOR BEDDING OR BACKFILL.
5. RECYCLED CONCRETE SHALL NOT BE USED.
6. CLAY DAMS SHALL BE REQUIRED WHEN AND WHERE NECESSARY PER THE SOLE DISCRETION OF THE LCDU.
7. THESE SPECIFICATIONS ARE TO BE CONSIDERED MINIMUM REQUIREMENTS AND ARE SUPERSEDED BY THE REQUIREMENTS OF THE LOCAL AUTHORITY WITH JURISDICTION OVER THE ROADWAY, WHEN APPLICABLE.

FIG 2.22.1

FOR WATER ONLY

SEE FIG 3.17.1 FOR SANITAARY

LAKE COUNTY DEPARTMENT OF UTILITIES		
TRENCH AND BEDDING DETAILS		
DATE: 6-16	DRAWN BY: DDB	SCALE: NONE

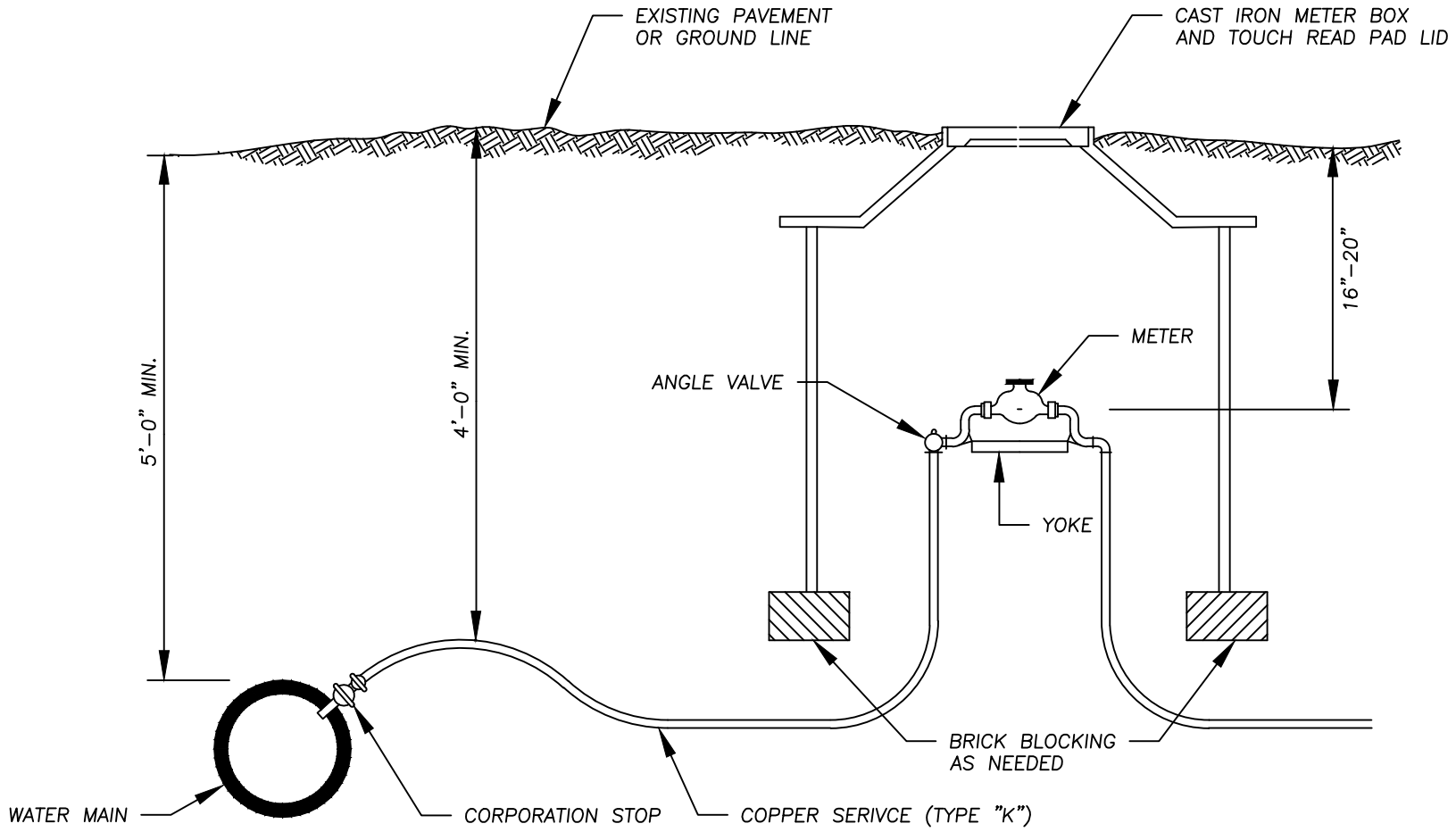

FIG 2.25.1

ALL MATERIALS SHALL BE AS LISTED IN THE LCDU APPROVED MATERIAL LIST.

LAKE COUNTY DEPARTMENT OF UTILITIES		
SERVICE TIE IN FOR OUTSIDE METER LESS THAN 2" DIA.		
DATE: 9–17	DRAWN BY: DDB	SCALE: NONE

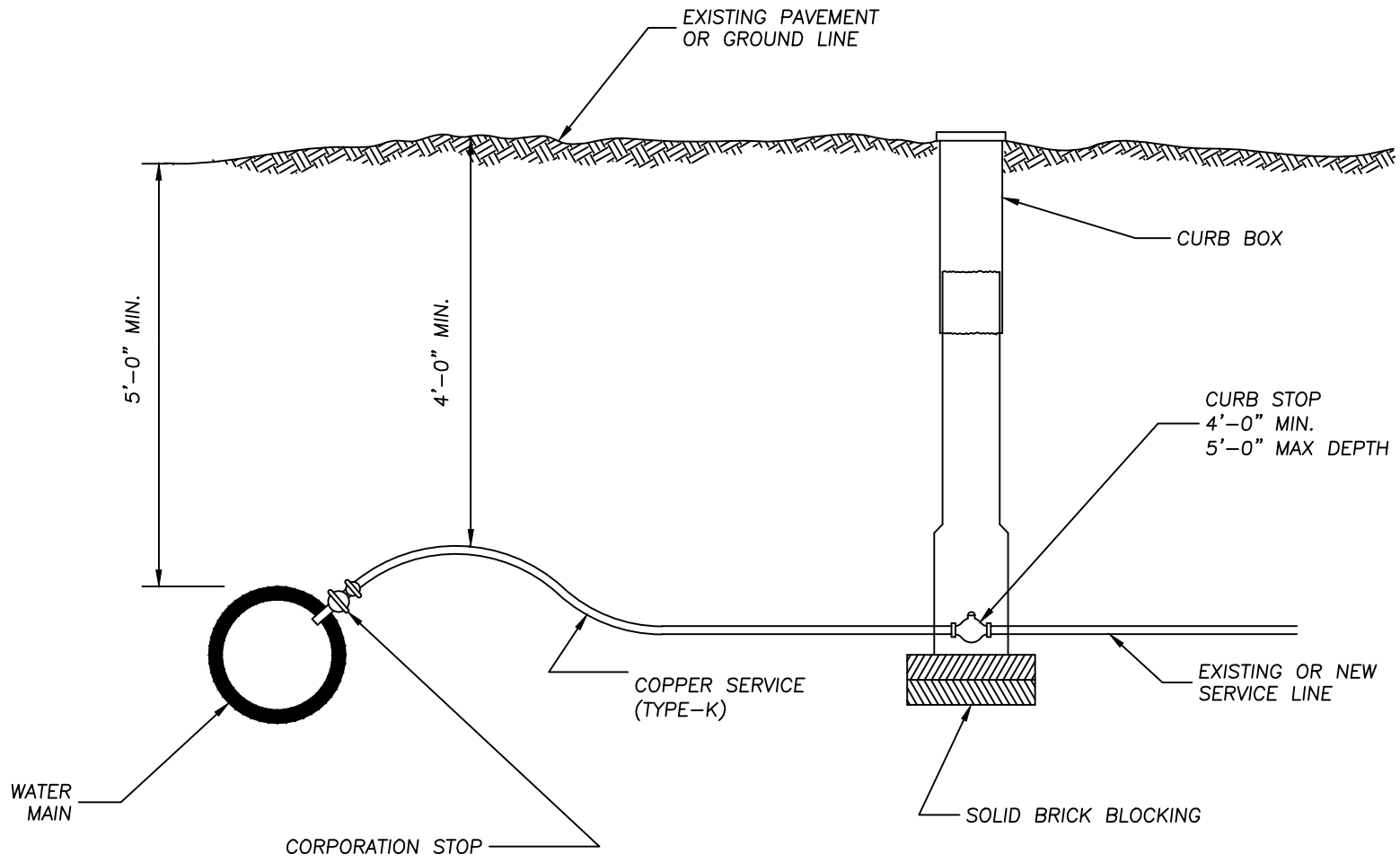

NOTES:

1. IF CURB STOP AND BOX FALL IN DITCH LINE MOVE BOTH TOWARD BUILDING OUT OF DITCH, BUT KEEP BOTH INSIDE THE RIGHT–OF–WAY. CURB STOP AND BOX TO BE A MINIMUM OF 5'–0" FROM BACK OF CURB OR EDGE OF PAVEMENT. SHOULD A CONFLICT OCCUR WITH OTHER UTILITIES OR STRUCTURES, LOCATION SHALL BE APPROVED BY SANITARY ENGINEER. CURB BOXES TO BE LOCATED OUTSIDE ALL PAVED AREAS. ALL FITTINGS TO BE OF THE FLARED TYPE.
2. ALL MATERIALS SHALL BE AS LISTED IN THE LCDU APPROVED MATERIAL LIST.
3. CURB STOP SHALL BE SET SUCH THAT THE OPERATING LEVER RUNS PERPENDICULAR TO THE MAIN WHEN IN THE "ON" POSITION.

FIG 2.25.2

LAKE COUNTY DEPARTMENT OF UTILITIES		
SERVICE TIE IN FOR INSIDE METER LESS THAN 2" DIA		
DATE: 8–17	DRAWN BY: DDB	SCALE: NONE

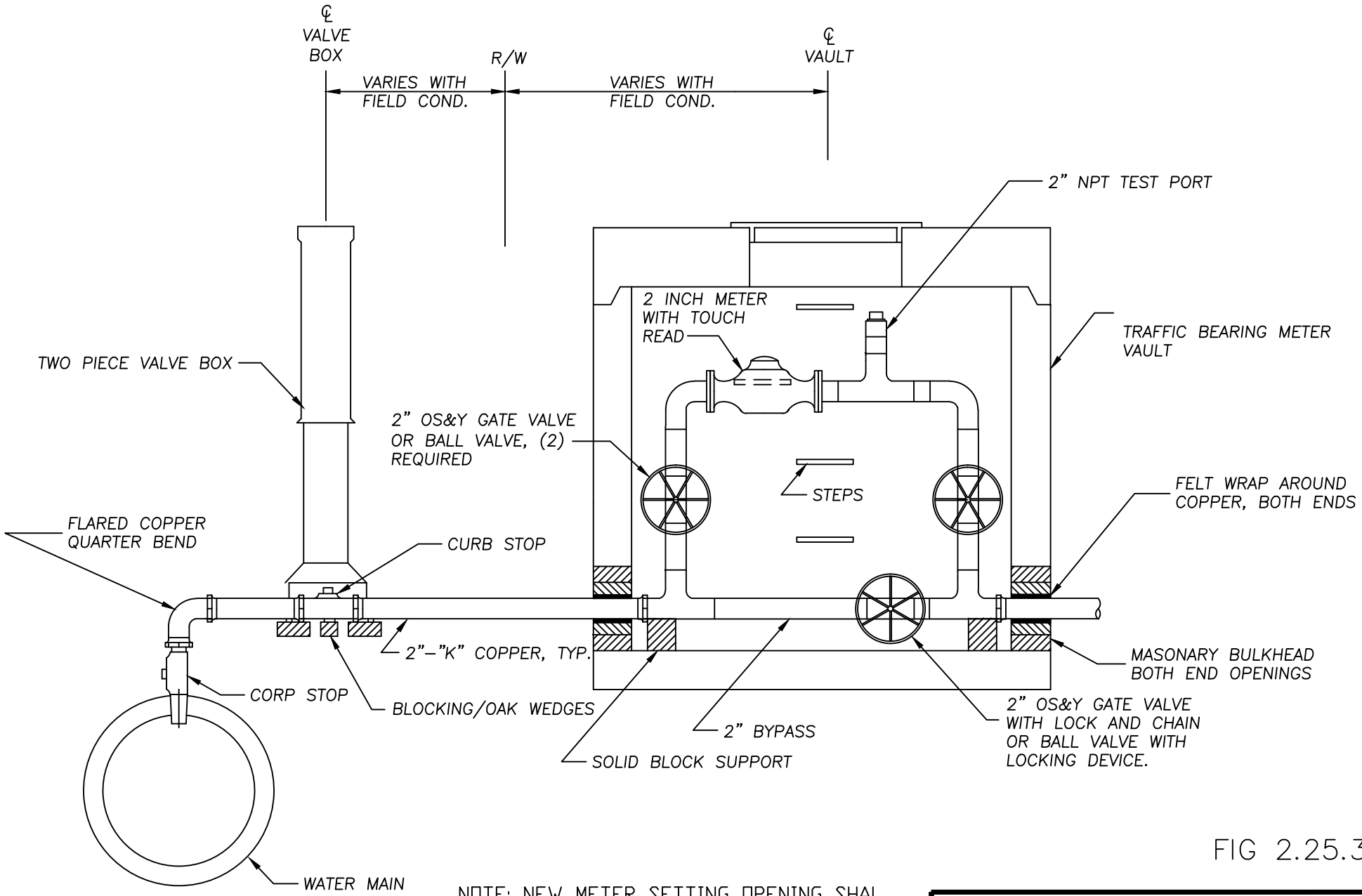

FIG 2.25.3

NOTE: NEW METER SETTING OPENING SHAL BE 17-1/2 INCHES. ALL PIPING INSIDE VAULT TO BE RED BRASS. ALL PIPING FROM MAIN TO VAULT TO BE TYPE "K" COPPER.
ALL MATERIALS SHALL BE AS LISTED ON THE LCDU APPROVED MATERIALS LIST

LAKE COUNTY DEPARTMENT OF UTILITIES		
2" TRAFFIC BEARING METER SETTING		
DATE: 10-09	DRAWN BY: DDB	SCALE: NONE

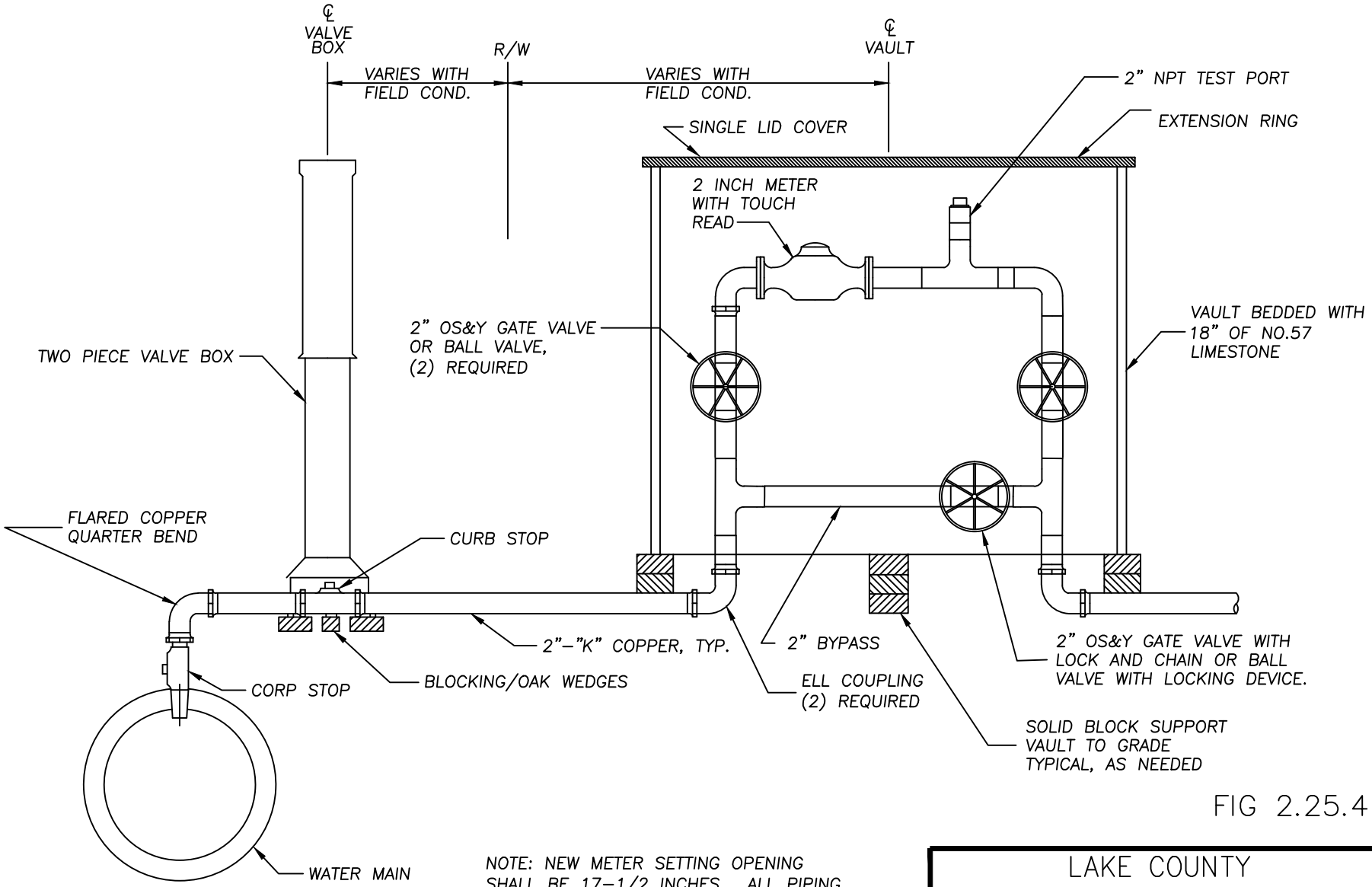

FIG 2.25.4

NOTE: NEW METER SETTING OPENING SHALL BE 17–1/2 INCHES. ALL PIPING INSIDE VAULT TO BE RED BRASS. ALL PIPING FROM MAIN TO VAULT TO BE TYPE "K" COPPER.
ALL MATERIALS TO BE AS LISTED ON THE LCDU APPROVED MATERILA LIST.

LAKE COUNTY DEPARTMENT OF UTILITIES		
2" NON–TRAFFIC BEARING METER SETTING		
DATE: 10–09	DRAWN BY: DDB	SCALE: NONE

NOTES:
1. PRIOR TO CONSTRUCTION CONTRACTOR SHALL SUBMIT FOR APPROVAL ALL SHOP DRAWINGS FOR WATER FACILITIES TO THE LAKE COUNTY DEPARTMENT OF UTILITIES.
2. ALL MATERIALS AND EQUIPMENT SHALL BE AS LISTED IN THE LCDU APPROVED MATERIAL LIST.
3. METER SHALL BE SET IN A HORIZONTAL POSITION AND HAVE AT LEAST EIGHT DIAMETERS OF STRAIGHT PIPE AT THE INLET END.
4. ALL VALVES SHOWN ARE FLANGED OS&Y GATE VALVES.
5. ASSEMBLY SHALL BE SUPPORTED BY SOLID CONCRETE BLOCKS.
6. VAULT AND HATCH DIMENSIONS AS REQUIRED TO SUIT EQUIPMENT SUPPLIED.
7. ALL METERS SHALL BE UL OR FM APPROVED FOR FIRE SERVICE.

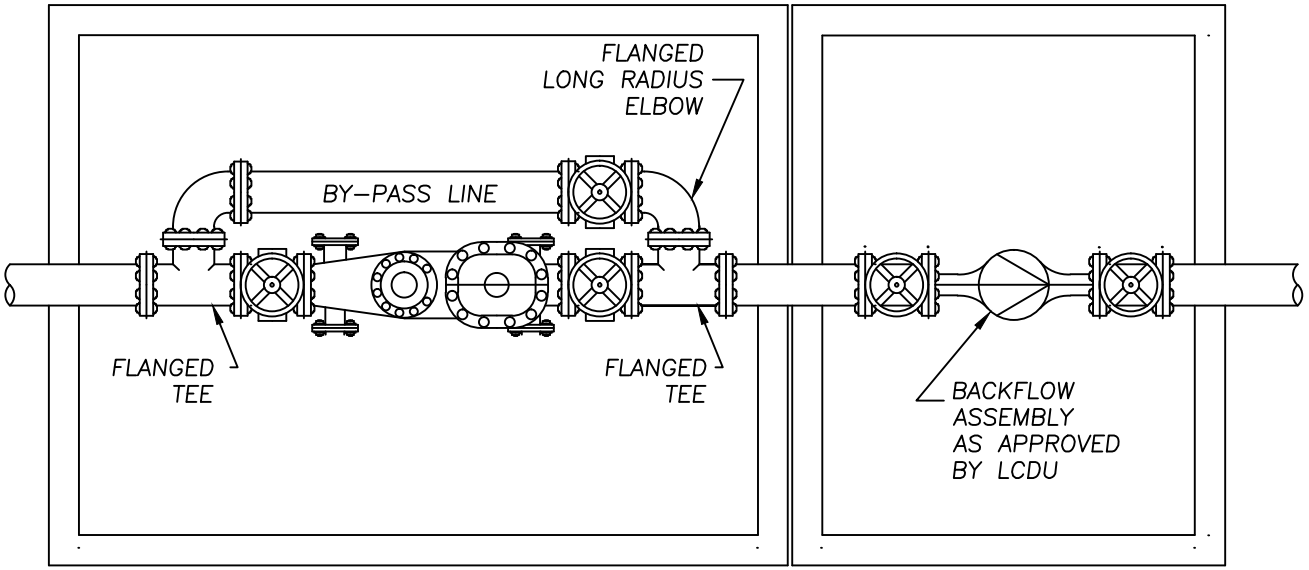

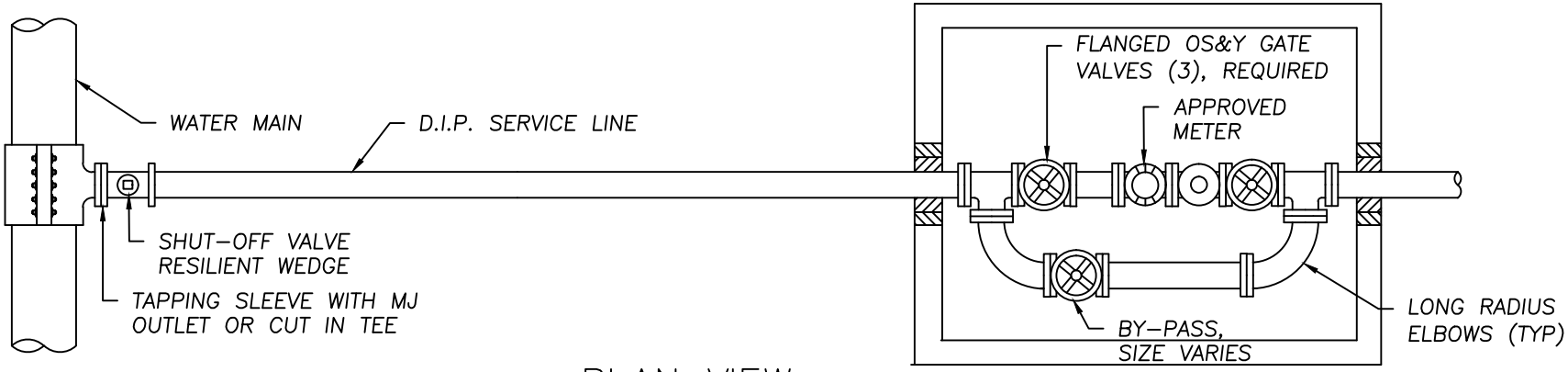

PLAN VIEW

FIG 2.25.5

LAKE COUNTY DEPARTMENT OF UTILITIES		
DOMESTIC & FIRE COMB. METER VAULT DETAIL		
DATE: 3-16	DRAWN BY: DDB	SCALE: NONE

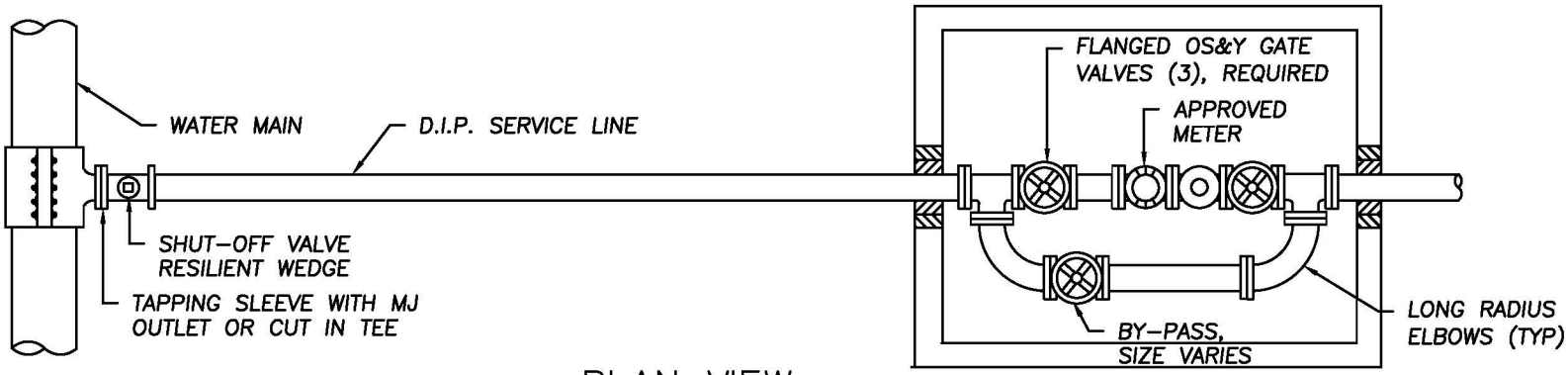

PLAN VIEW

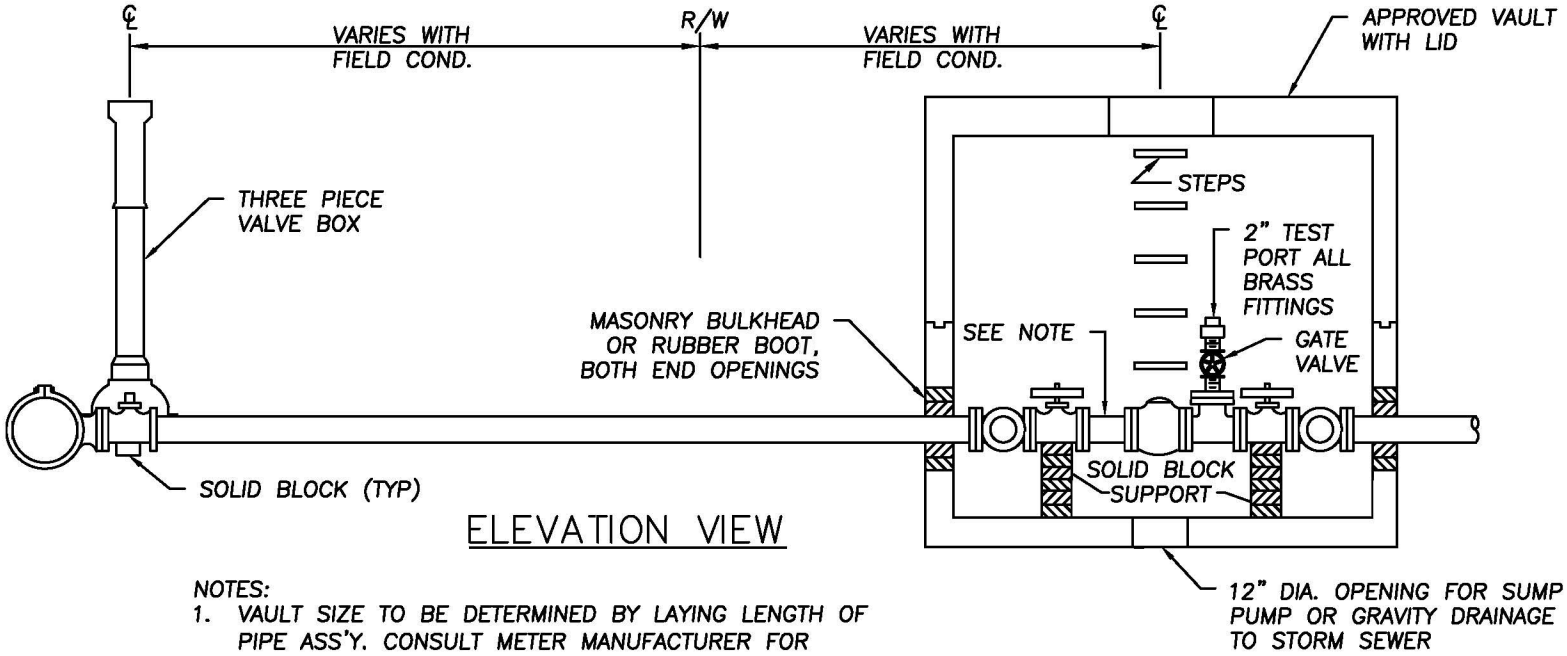

ELEVATION VIEW

NOTES:

1. VAULT SIZE TO BE DETERMINED BY LAYING LENGTH OF PIPE ASS'Y. CONSULT METER MANUFACTURER FOR RECOMMENDED DISTANCES BETWEEN FITTINGS ON INLET & OUTLET SIDE OF METER.
2. TEE WILL BE REMOVED.
3. ALL MATERIALS SHALL BE AS LISTED IN THE LCDU APPROVED MATERIAL LIST.

FIG 2.25.6

LAKE COUNTY DEPARTMENT OF UTILITIES		
OUTSIDE METER SETTING 4" & LARGER, DOMESTIC ONLY		
DATE: 6-16	DRAWN BY: DDB	SCALE: NONE

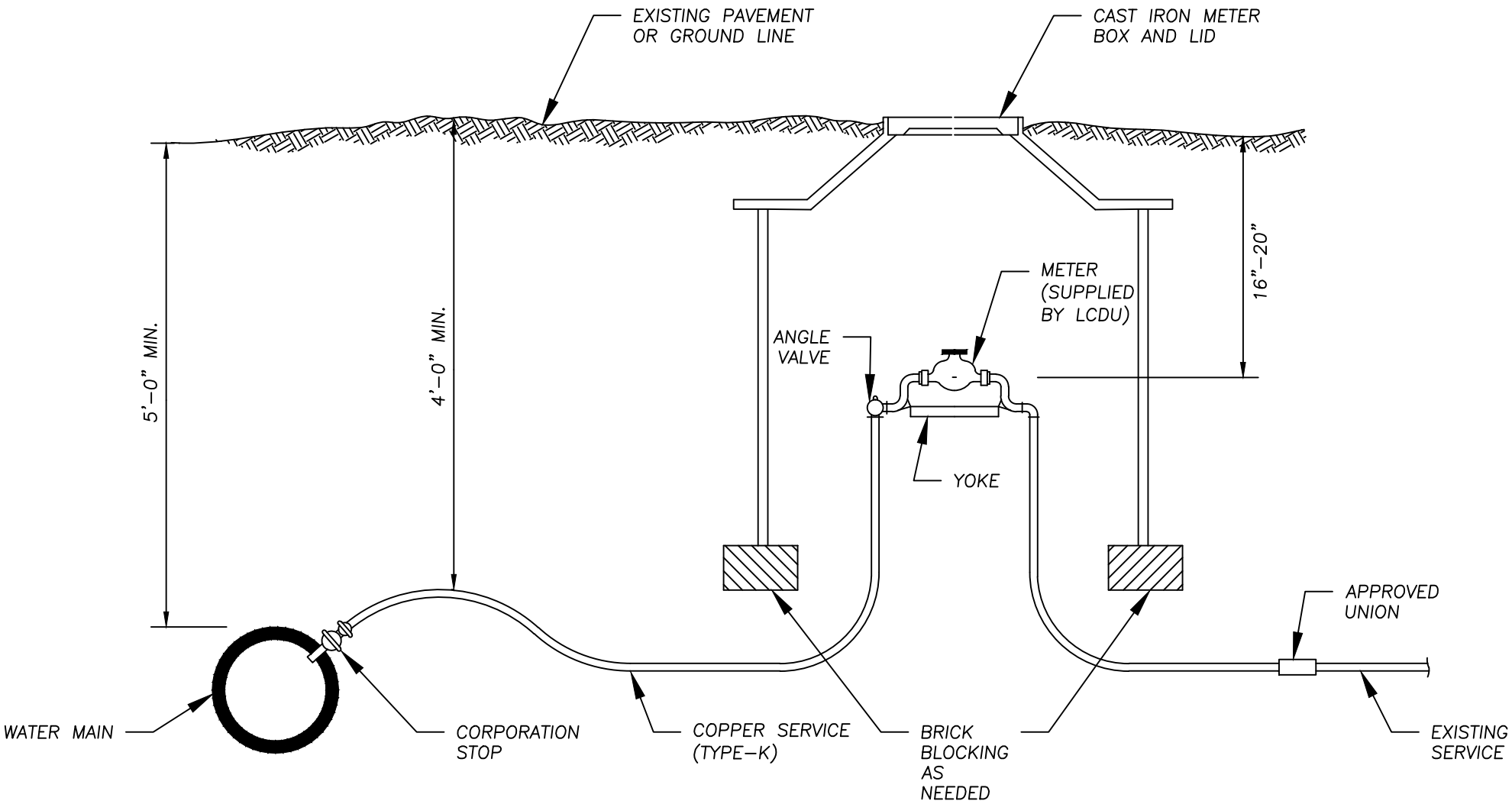

FIG 2.25.7

NOTES:
1. CONTRACTOR TO SUPPLY ALL NEW PARTS FROM MAIN LINE TO AND INCLUDING THE UNION TO THE EXISTING SERVICE, EXCEPT FOR THE NEW METER.
2. CONTRACTOR TO DISPOSE OF ALL OLD PARTS THAT ARE REMOVED.
3. ALL MATERIALS SHALL BE AS LISTED IN LCDU APPROVED MATERIAL LIST

LAKE COUNTY DEPARTMENT OF UTILITIES		
OUTSIDE METER REPLACEMENT DETAIL		
DATE: 9-17	DRAWN BY: D.D.B.	SCALE: NONE

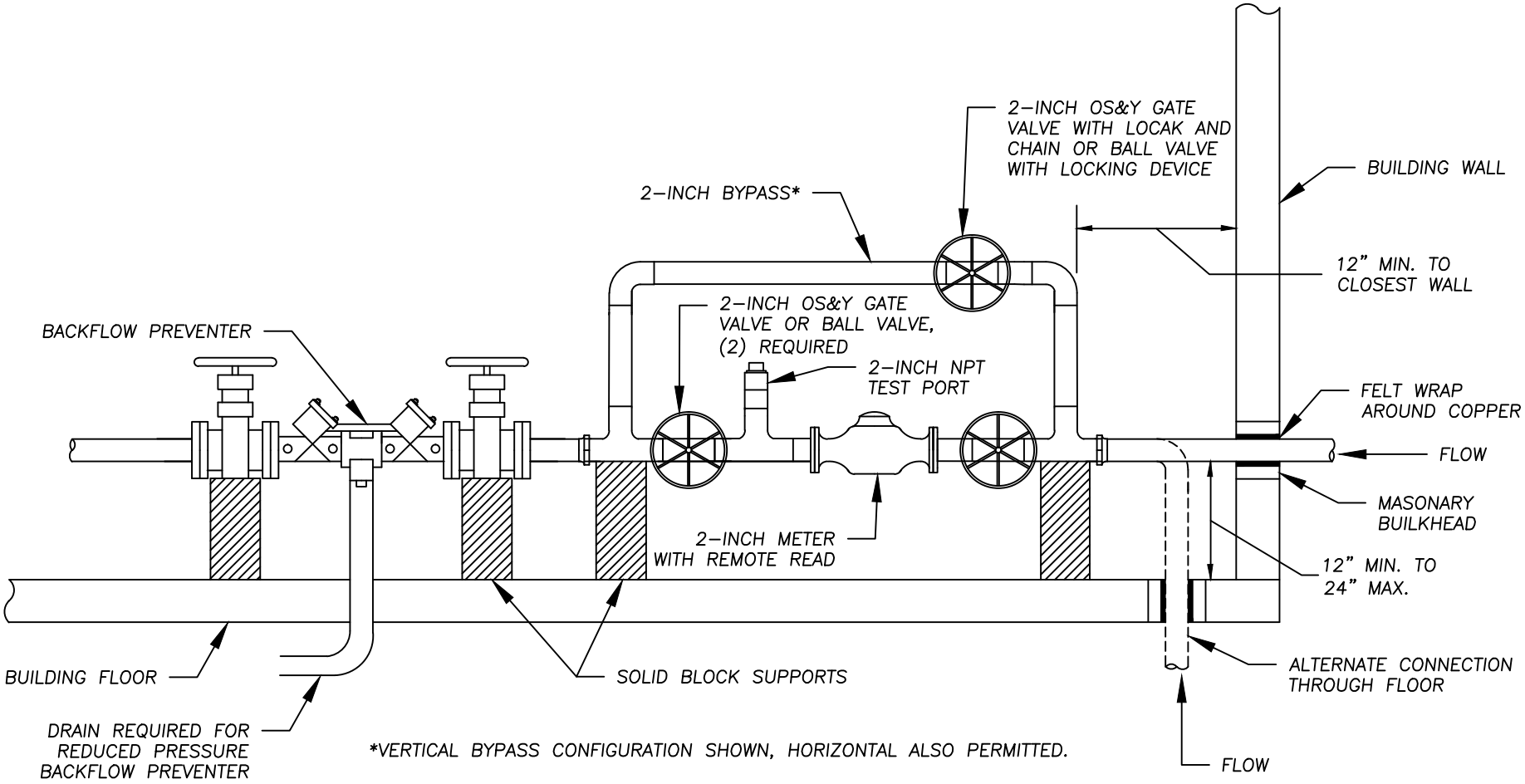

FIG 2.25.8

NOTE: ALL METER SET PIPING TO BE RED BRASS. ALL PIPING FROM MAIN TO METER SET TO BE TYPE "K" COPPER. ALL MATERIALS SHALL BE AS LISTED ON THE LCDU APPROVED MATERIALS LIST.

LAKE COUNTY DEPARTMENT OF UTILITIES		
2" INSIDE METER SETTING WITH BACKFLOW PREVENTER		
DATE: 6–16	DRAWN BY: DDB	SCALE: NONE

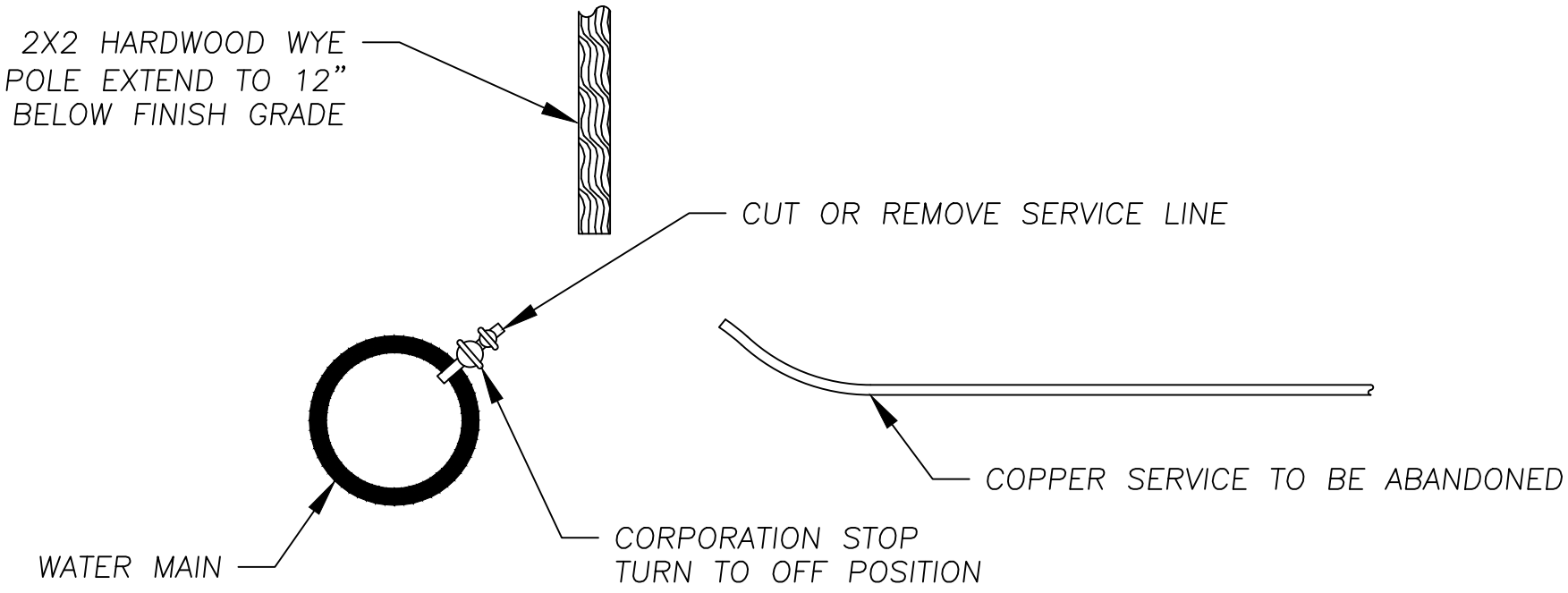

NOTE: COPPER SERVICE TO BE ABANDONED SHALL BE CUT AT CORPORATION STOP OR REMOVED. THE CORPORATION STOP SHALL BE TURNED TO THE OFF POSITION.

FIG 2.25.9

LAKE COUNTY DEPARTMENT OF UTILITIES		
WATER SERVICE 2" DIA. AND LESS, ABANDONMENT DETAIL		
DATE: 6–16	DRAWN BY: DDB	SCALE: NONE

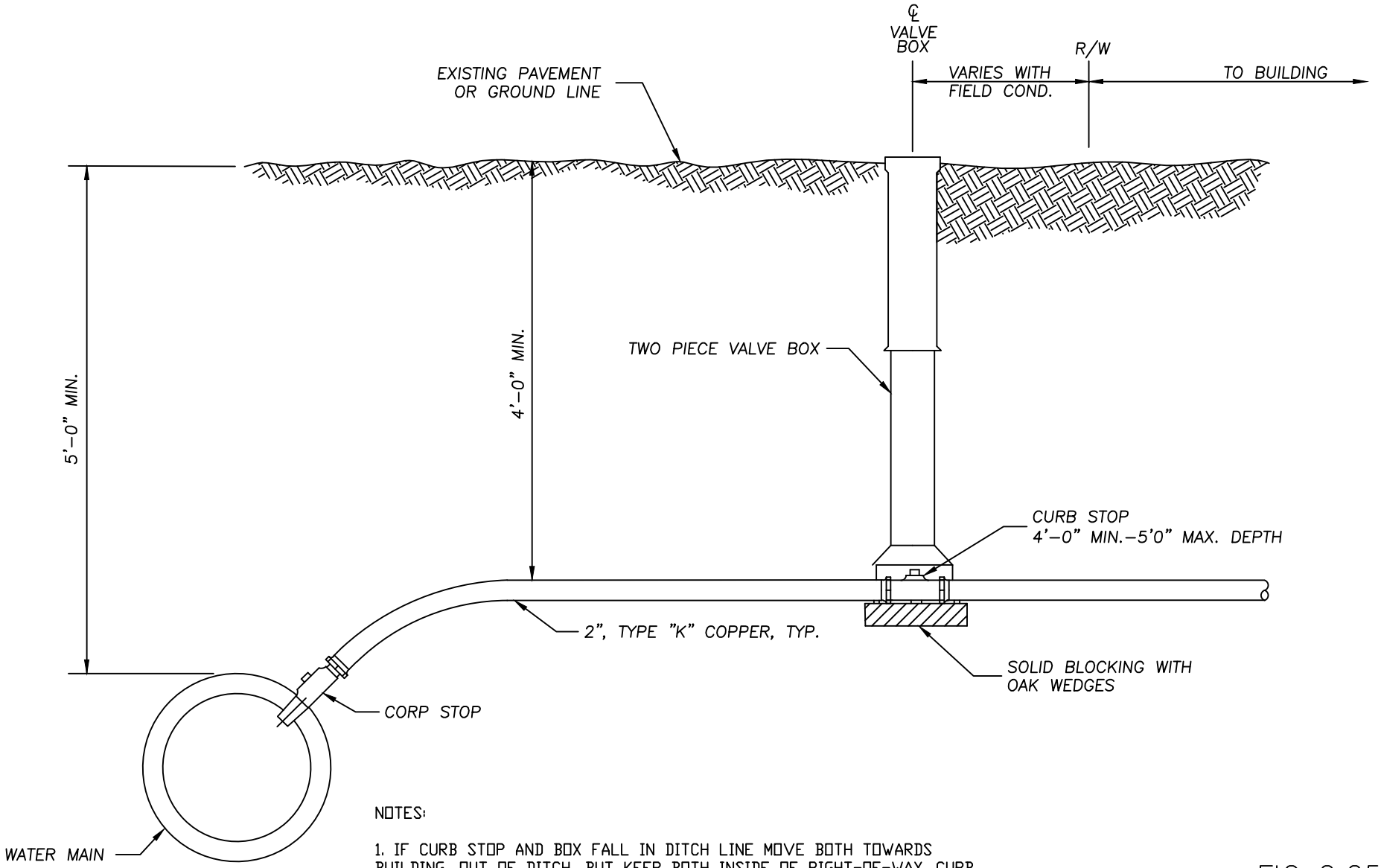

NOTES:

1. IF CURB STOP AND BOX FALL IN DITCH LINE MOVE BOTH TOWARDS BUILDING, OUT OF DITCH, BUT KEEP BOTH INSIDE OF RIGHT-OF-WAY. CURB STOP AND BOX TO BE A MINIMUM OF 5'-0" FROM BACK OF CURB OR EDGE OF PAVEMENT. SHOULD A CONFLICT OCCUR WITH OTHER UTILITIES OR STRUCTURES, LOCATION SHALL BE APPROVED BY SANITARY ENGINEER. CURB STOPS TO BE LOCATED OUTSIDE OF ALL PAVED AREAS. ALL FITTINGS TO BE FLARED TYPE.

2. ALL MATERIALS SHALL BE AS LISTED IN THE LCDU APPROVED MATERIAL LIST.

3. CURB STOP SHALL BE SET SUCH THAT THE OPERATING LEVER RUNS PERPENDICULAR TO THE MAIN WHEN IN THE "ON" POSITION.

FIG 2.25.10

LAKE COUNTY DEPARTMENT OF UTILITIES		
2" TIE IN FOR INSIDE METER SETTING		
DATE: 8-17	DRAWN BY: DDB	SCALE: NONE

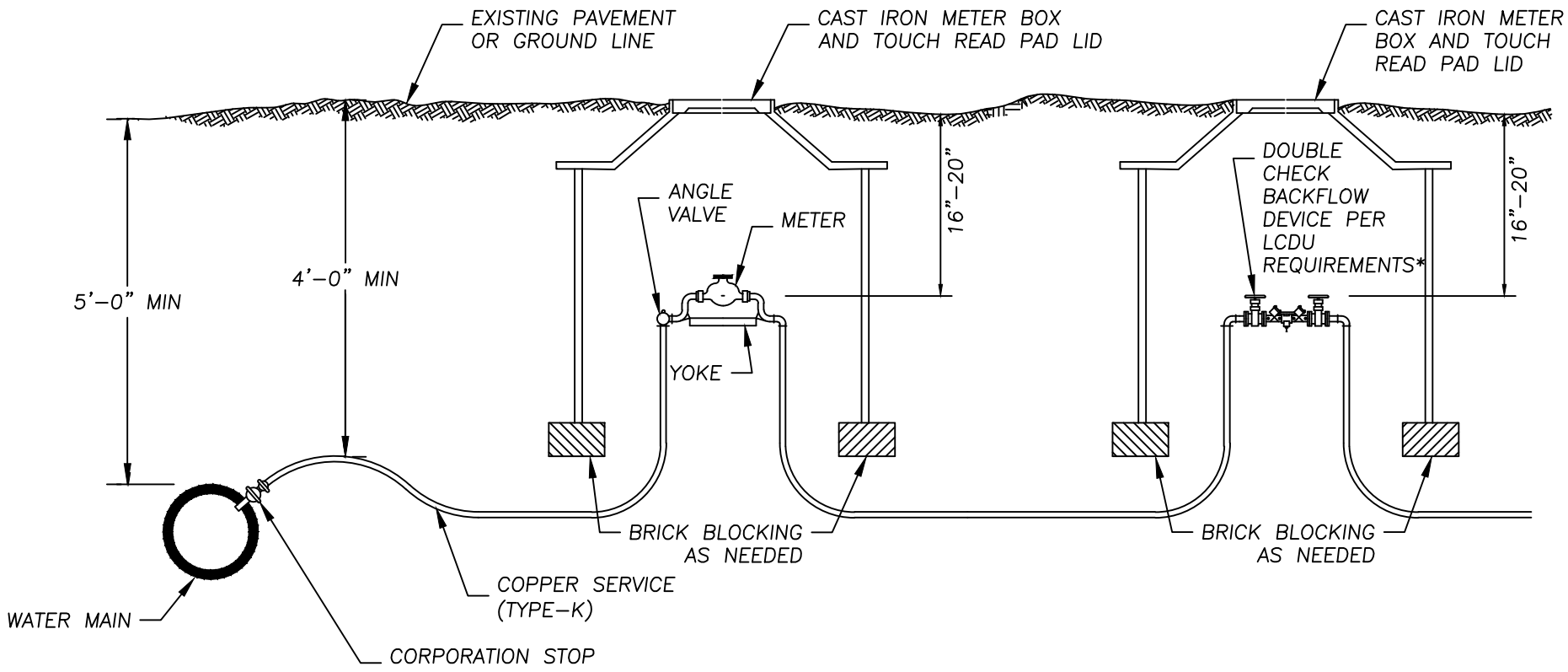

ALL MATERIALS SHALL BE AS LISTED IN THE LCDU APPROVED MATERIAL LIST.

* THIS DETAIL IS FOR INSTALLATION OF DOUBLE CHECK BACKFLOW DEVICES ONLY. REDUCED PRESSURE BACKFLOW DEVICES MUST BE INSTALLED ABOVE GROUND IN A HEATED INCLOSURE.

FIG 2.25.12

LAKE COUNTY DEPARTMENT OF UTILITIES		
SERVICE TIE IN WITH BFP FOR OUTSIDE METER LESS THAN 2" DIA.		
DATE: 9–17	DRAWN BY: DDB	SCALE: NONE

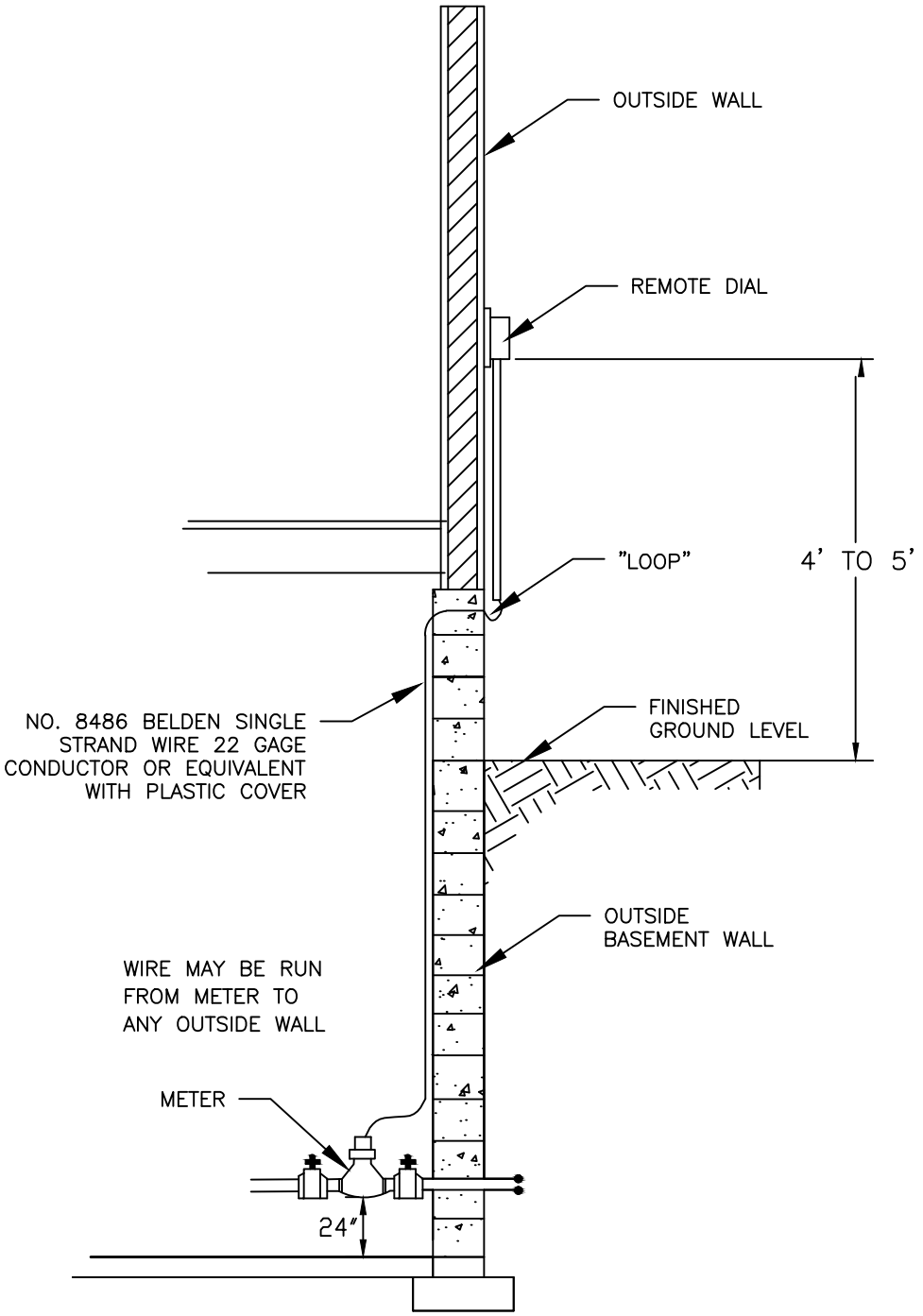

FIG 2.26.1

ALL MATERIALS TO BE AS LISTED ON THE LCDU APPROVED MATERIAL LIST.

LAKE COUNTY DEPARTMENT OF UTILITIES		
REMOTE METER FOR BASEMENT		
DATE: 6-16	DRAWN BY: D.D.B.	SCALE: NONE

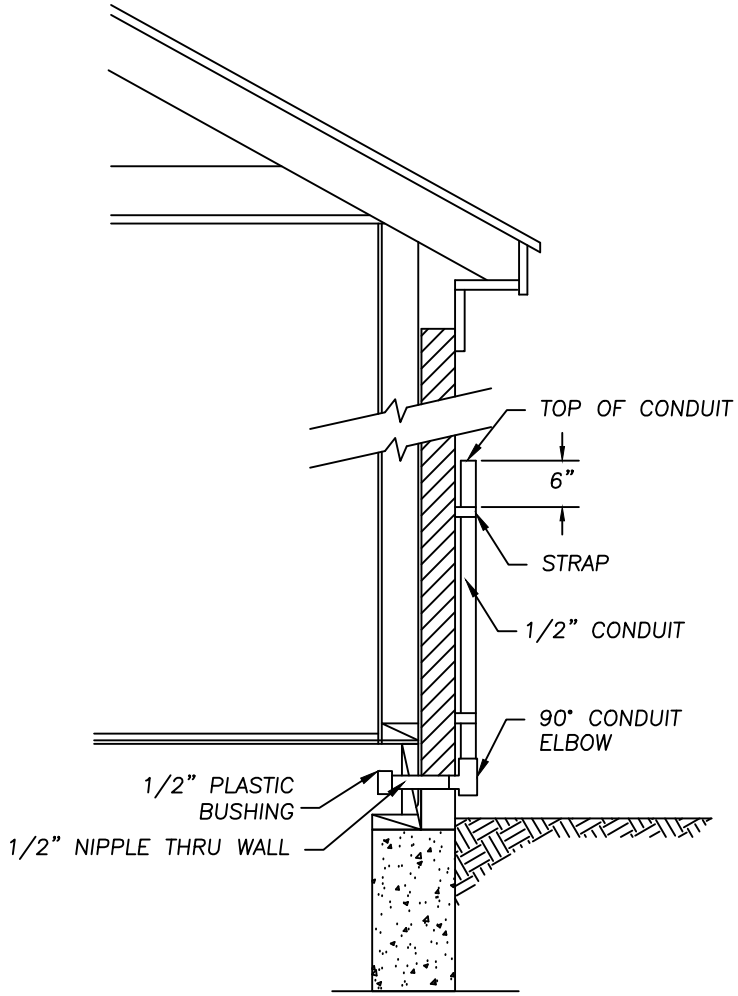

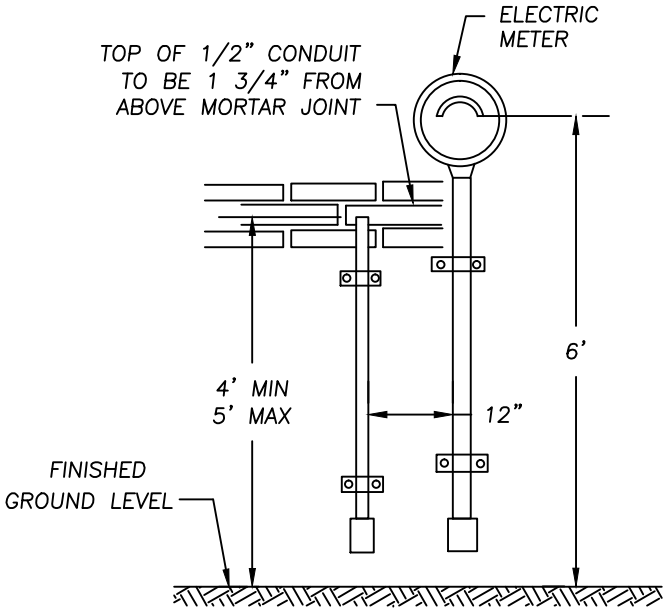

FIG 2.26.2

LAKE COUNTY DEPARTMENT OF UTILITIES		
REMOTE METER FOR CRAWL SPACE		
DATE: 08-03	DRAWN BY:-	SCALE: NONE

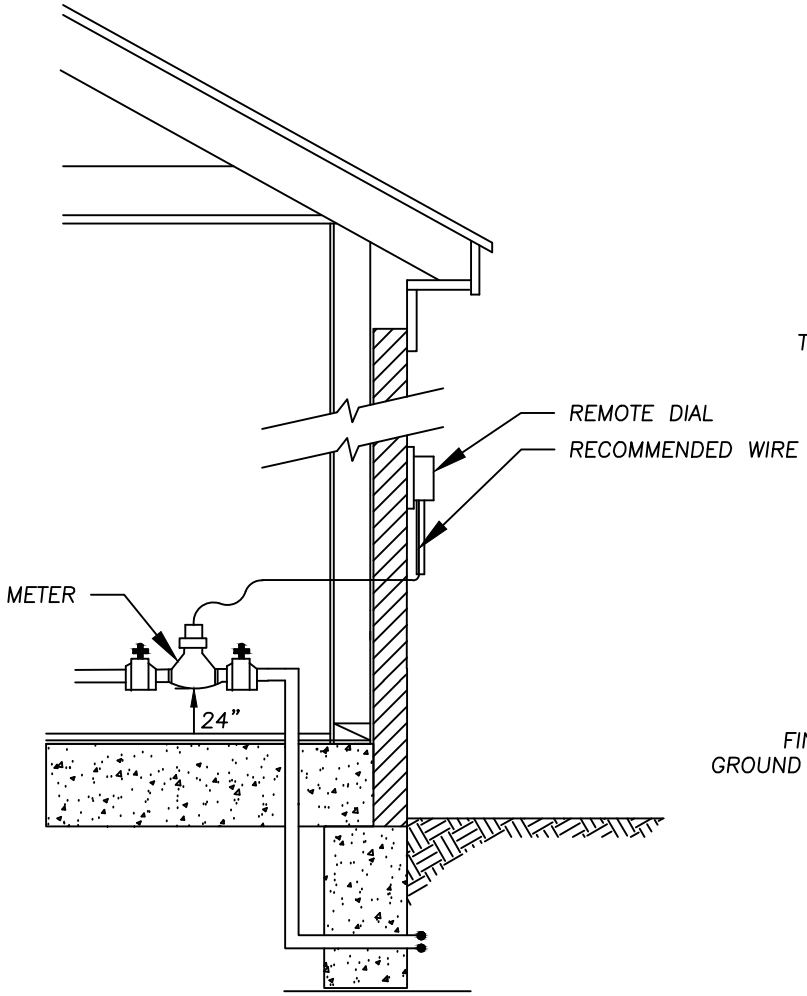

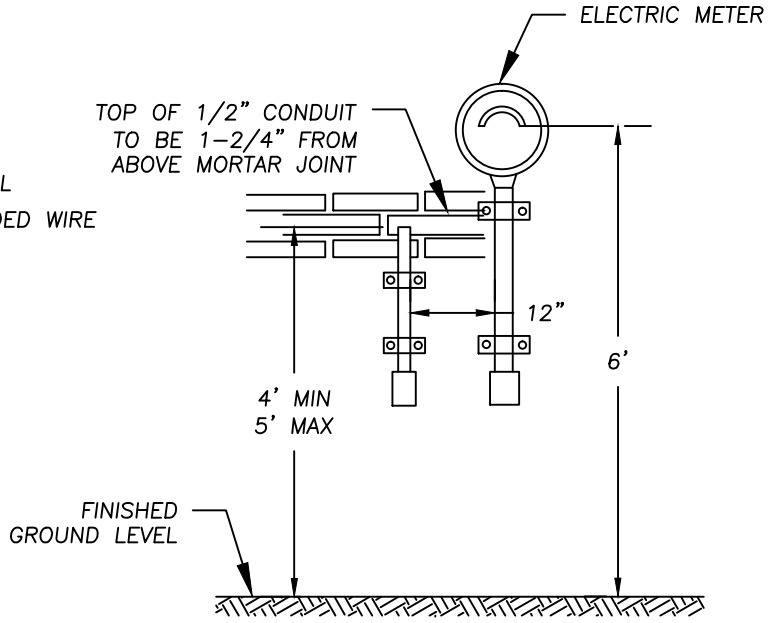

FIG 2.26.3

LAKE COUNTY DEPARTMENT OF UTILITIES		
REMOTE METER FOR SLAB		
DATE: 5-16	DRAWN BY:-	SCALE: NONE

NOTES:

1. FOR INCOMING LINES 6" OR SMALLER USE 1-1/2" FITTINGS.
2. FOR INCOMING LINES 8" OR LARGER USE 2" FITTINGS.
3. COMPLETE FLUSH PIPE AND VALVE SHALL BE INSTALLED PRIOR TO UNDERGROUND TESTING.
4. UPON COMPLETION OF TESTING, THE FIRE SPRINKLER CONTRACTOR SHALL INSTALL AN APPROVED BACKFLOW PREVENTOR AS THE FIRST FIXTURE ON RISER PIPE.
5. RISER PIPE SHALL BE ONE PIECE CONSTRUCTION.
6. ALL RISER PIPE RESTRAINT HARDWARE, INCLUDING THREADED ROD, NUTS AND WASHERS SHALL BE STAINLESS STEEL.

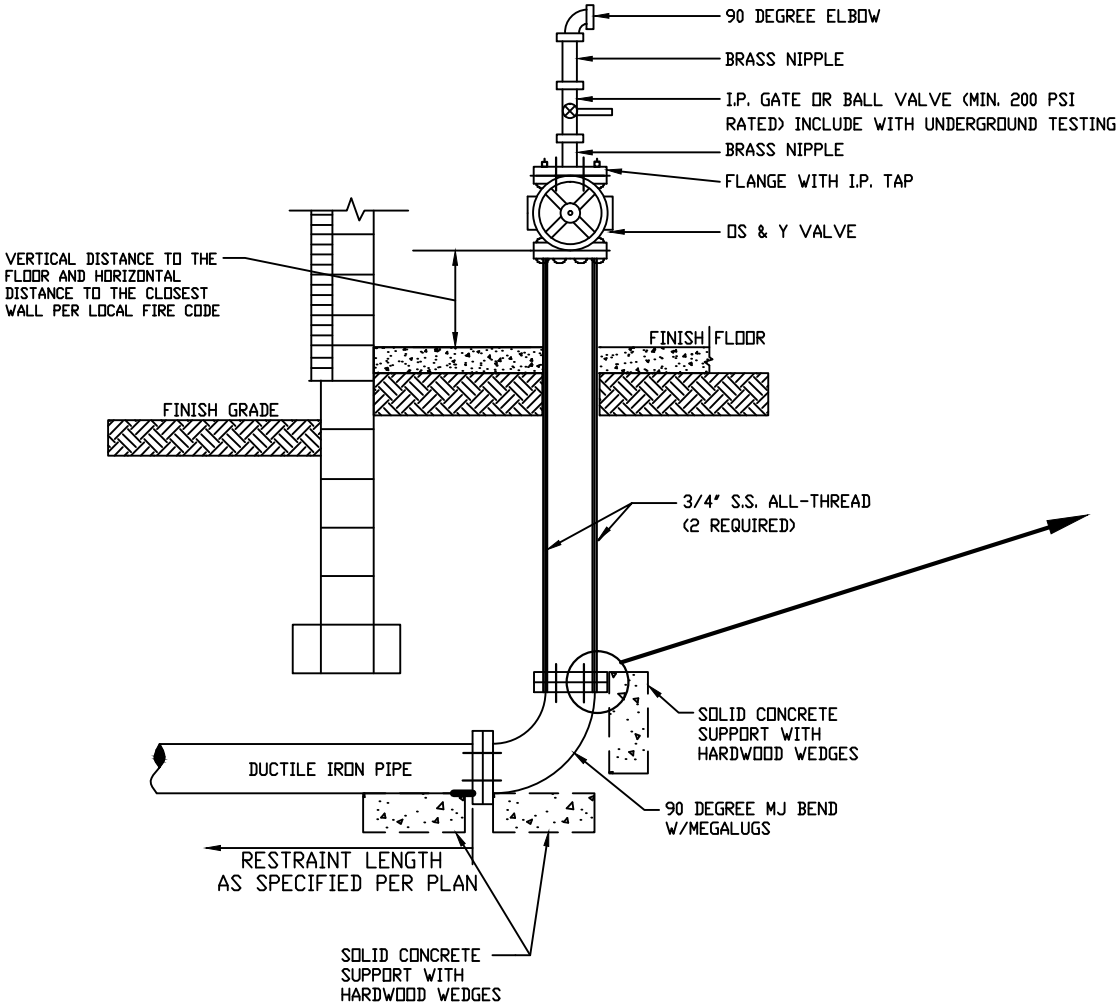

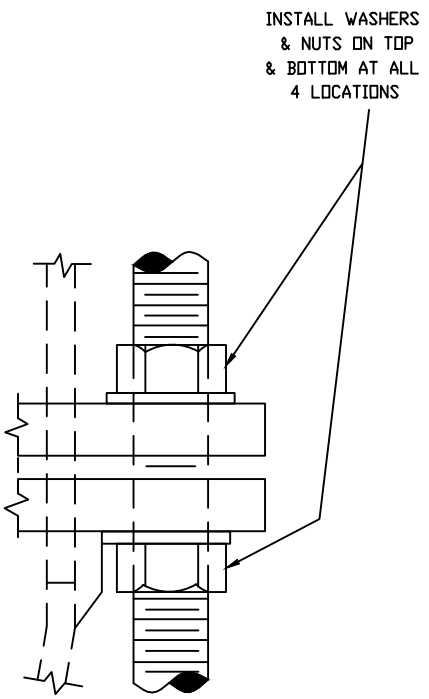

FIG 2.26.4

LAKE COUNTY DEPARTMENT OF UTILITIES		
RISER DETAIL		
DATE: 5-16	DRAWN BY: D.D.B.	SCALE: NONE

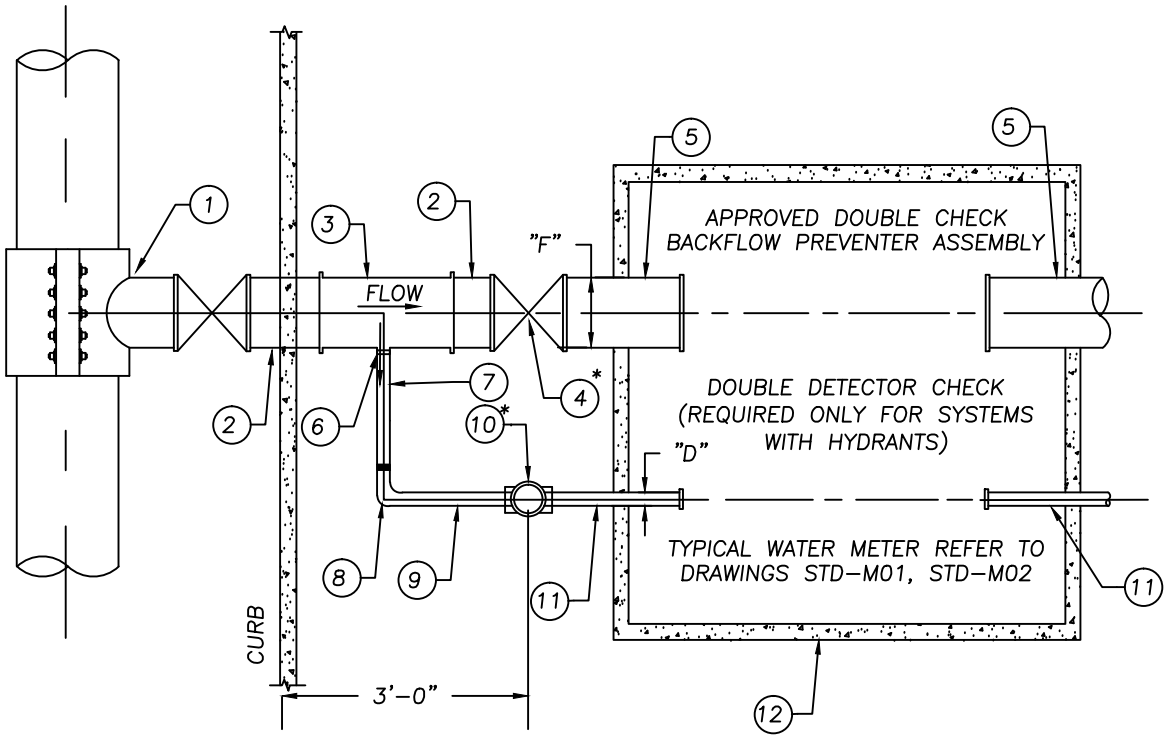

PLAN VIEW

1. (1) S.O.M. X FIRE LINE ("F") SIZED MECHANICAL JOINT BRANCH SLEEVE AND "F" SQUARE HEAD GATE TAP VALVE WITH RETAINED MECHANICAL JOINT OUTLET AND VALVE BOX COMPLETE.
2. X FEET "F" DUCTILE IRON CLASS 53 CEMENT LINED PLAIN END X PLAIN END PIPE (CUT TO SUIT). IF THE PIPE IS LONGER THAN 1 PIPE LENGTH, THEN THE PIPE IS TO HAVE TYPE ii BOTLESS RESTRAINED PUSH-ON JOINTS.
3. (1) "F" X "F" X "D" DUCTILE IRON CLASS 350 CEMENT LINED RETAINED MECHANICAL JOINT TAPPED TEE WITH CONCRETE PIER.
4. (1) "F" RETAINED MECHANICAL JOINT. SQUARE HEAD GATE VALVE WITH VALVE BOX COMPLETE.
5. X FEET "F" PLAIN END X FLANGED DUCTILE IRON CLASS 52 CEMENT LINED PIPE (CUT TO SUIT).
6. OPTIONAL (1)-THREADED REDUCING BUSHING.
7. X FEET "D" THREADED END X THREADED END TYPE "K" COPPER.
8. (1)-THREADED BRASS 90* ELBOW.
9. X FEET "D" THREADED END X THREADED END TYPE "K"
10. (1)-"D" THREADED TYPE DRISEAL CURB VALVE WITH VALVE HOX COMPLETE.
11. X FEET "D" TYPE "K" COPPER PIPE (CUT TO SUIT).
12. (1)-APPROVED PRE-CAST FIRELINE VAULT.

*CURB VALVES MUST BE LOCATED IN THE RIGHT OF WAY

S.O.M." - DENOTES SIZE OF MAIN.
"F" - DENOTES NOMINAL PIPE DIAMETER OF FIRE LINE.
"D" - DENOTES NOMINAL PIPE DIAMETER OF DOMESTIC LINE.

** METERS IN VAULTS MUST BE ABLE TO BE READ FROM ABOVE WITHOUT ENTRY. IF NO CLEAR LINE OF SITE TO THE METER CAN BE ACHIEVED BY PLACEMENT OF THE ACCESS MANHOLE, AS DETERMINED BY THE LCDU, A 12-INCH DIAMETER VIEWING PORT MUST BE PROVIDED THAT IS CENTERED OVER THE METER FOR READING PURPOSES IN ADDITION TO THE MANHOLE NEEDED FOR ACCESS. CONTRACTOR MAY ORDER PRECAST MANHOLE WITH VIEWING PORT OPENING OR CORE OPENING ONSITE. ALL TRAFFIC BEARING AND NON-TRAFFIC BEARING VAULTS MUST MAINTAIN THEIR DESIGNED STRUCTURAL INTEGRITY AND CASTING SHALL BE SECURED FOR ROAD TRAFFIC. CONTRACTOR IS REQUIRED TO CALL THE PERMITS AND SALES UNIT OF THE LCDU AT 440-350-2652 FOR INSPECTION OF ANY VAULT SET.

FIG. 2.27.1

LAKE COUNTY DEPARTMENT OF UTILITIES		
OUTSIDE METER SETTING 4" & LARGER, DOMESTIC ONLY		
DATE: 6-16	DRAWN BY: SC	SCALE: NONE

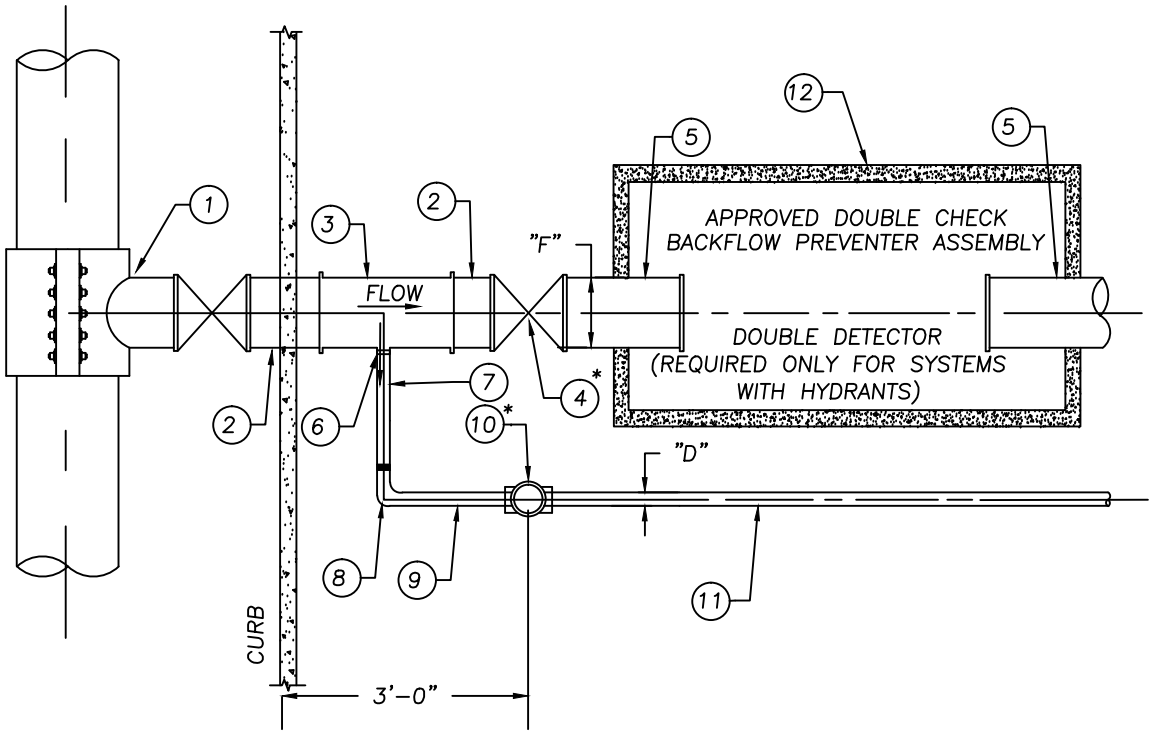

PLAN VIEW

S.O.M." – DENOTES SIZE OF MAIN.
"F" – DENOTES NOMINAL PIPE DIAMETER OF FIRE LINE.
"D" – DENOTES NOMINAL PIPE DIAMETER OF DOMESTIC LINE.

1. (1) S.O.M. X FIRE LINE ("F") SIZED MECHANICAL JOINT BRANCH SLEEVE AND "F" SQUARE HEAD GATE TAP VALVE WITH RETAINED MECHANICAL JOINT OUTLET AND VALVE BOX COMPLETE.
2. X FEET "F" DUCTILE IRON CLASS 52 CEMENT LINED PLAIN END X PLAIN END PIPE (CUT TO SUIT). IF THE PIPE IS LONGER THAN 1 PIPE LENGTH, THEN THE PIPE IS TO HAVE TYPE ii BOTLESS RESTRAINED PUSH–ON JOINTS.
3. (1) "F" X "F" X "D" DUCTILE IRON CLASS 350 CEMENT LINED RETAINED MECHANICAL JOINT TAPPED TEE WITH CONCRETE PIER.
4. (1) "F" RETAINED MECHANICAL JOINT. SQUARE HEAD GATE VALVE WITH VALVE BOX COMPLETE.
5. X FEET "F" PLAIN END X FLANGED DUCTILE IRON CLASS 52 CEMENT LINED PIPE (CUT TO SUIT).
6. OPTIONAL (1)–THREADED REDUCING BUSHING.
7. X FEET "D" THREADED END X THREADED END TYPE "K" COPPER.
8. (1)–THREADED BRASS 90* ELBOW.
9. X FEET "D" THREADED END X THREADED END TYPE "K"
10. (1)–"D" THREADED TYPE DRISEAL CURB VALVE WITH VALVE HOX COMPLETE.
11. X FEET "D" TYPE "K" COPPER PIPE (CUT TO SUIT).
12. (1)–APPROVED PRE–CAST FIRELINE VAULT.

*CURB VALVES MUST BE LOCATED IN THE RIGHT OF WAY

FIG. 2.27.2

LAKE COUNTY DEPARTMENT OF UTILITIES		
OUTSIDE METER SETTING 4" & LARGER, DOMESTIC ONLY		
DATE: 6–16	DRAWN BY: SC	SCALE: NONE

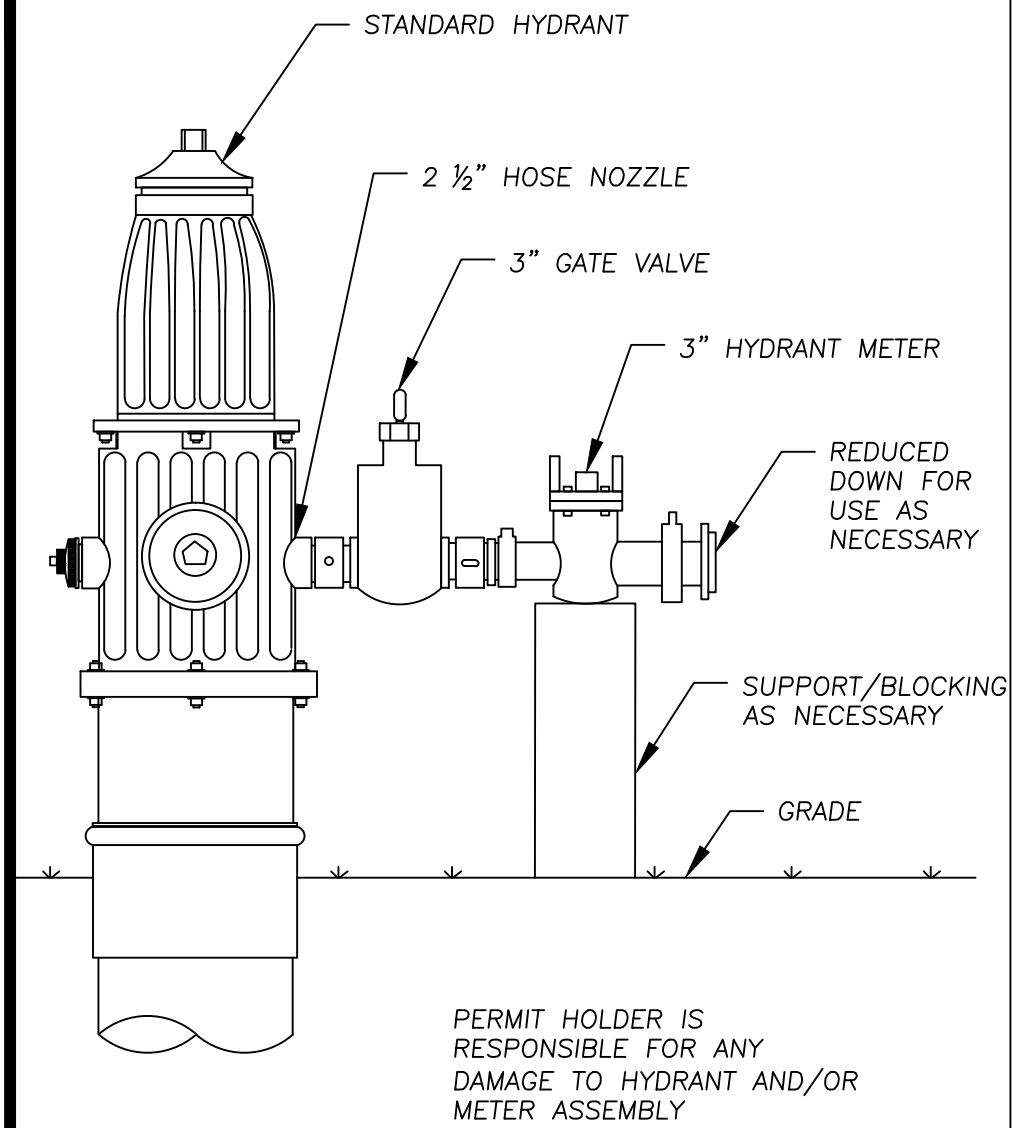

– WITH METER –

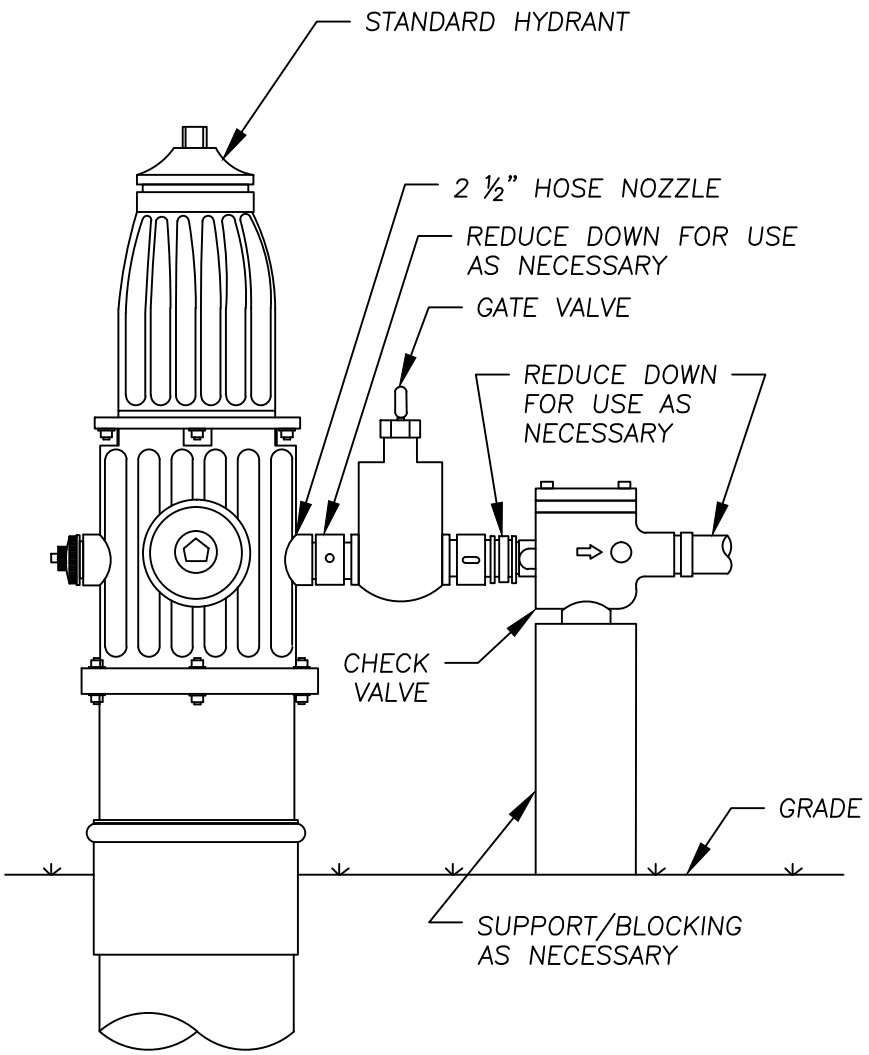

– WITHOUT METER –

FIG. 2.28.1

LAKE COUNTY DEPARTMENT OF UTILITIES		
TEMPORARY WATER SERVICE FROM PUBLIC FIRE HYDRANT		
DATE: 6–16	DRAWN BY: SC	SCALE: NONE

Section 3 – Sanitary Collection

GENERAL REQUIREMENTS 3-1

DESIGN PLANS
3.00 Sanitary Plan Criteria

I. MATERIALS 3-1

3.01. PIPE AND FITTINGS 3-1
A. Gravity Sewers 3-1
1. Requirements 3-1
2. PVC Plastic Pipe and Fittings 3-2
3. Concrete Pipe and Fittings 3-4
4. PVC composite and Solid Wall Pipe and Fittings 3-5
5. Vitrified Clay Pipe and Fittings 3-5
6. Ductile Iron Pipe and Fittings 3-6
B. Replacement Of Existing Sewers And Drains 3-6
C. Force Mains 3-7
D. Small Diameter Force Mains For Privately Operated Pump Stations 3-7

3.02. POLYETHYLENE ENCASEMENT 3-7
3.03. PIPE INSULATION 3-8
3.04. PIPELINE MARKERS 3-8
3.05. STEEL ENCASEMENT PIPE 3-8
3.06. MANHOLES 3-9
A. Description 3-9
B. Bases 3-9
C. Walls And Tops 3-10
D. Chimney Seals 3-11
E. Steps 3-11
F. Pipe Sewer Stubs 3-11

3.07. FRAMES AND COVERS 3-11
3.08. DROP CONNECTIONS 3-12
3.09. CLEANOUT MANHOLES 3-12

3.10. SERVICE CONNECTIONS 3-12
3.11. COMBINATION AIR RELEASE/VACUUM VALVES AND MANHOLES 3-14
A. Requirements 3-14
B. Combination Air Release/Vacuum Valves 3-14
C. Manholes 3-14
3.12. WASTEWATER PUMPING STATIONS 3-14
A. General 3-14
1. Description 3-14
2. Concrete Work 3-15
3. Supports 3-15
B. Wet Well 3-15
C. Valve Vault 3-15
D. Pumps 3-16
1. Description 3-16
2. Operating Conditions 3-16
3. Pumps 3-16
4. Motors 3-17
5. Floor Doors and Pump Guides 3-17
E. Piping 3-18
1. Requirements 3-18
2. Wall Castings, Sleeves, Etc. 3-18
3. Ductile Iron Pipe and Fittings 3-19
4. PVC Plastic Pipe and Fittings 3-19
5. Gate Valves 3-19
6. Check Valves 3-20
7. Ball Valves 3-20
8. Pipe Couplings 3-20
F. Pump Controls 3-21
1. Pump Control Panel 3-21
2. Liquid Level Control System 3-23
G. Standby Power 3-23
H. Building And Appurtenances 3-24
I. Access Driveway And Fencing 3-24
J. Remote Telemetry Unit 3-24
1. General 3-24
2. Bidder Qualification 3-24

3. System Description 3-24
4. RTU Description 3-25
5. Radio Description 3-25
6. Ancillary Equipment 3-25
3.13. BEDDING AND BACKFILL 3-26
A. Bedding 3-26
B. Granular Backfill 3-26
C. Control Density Fill (CDF) 3-26

II. INSTALLATION 3-26
3.14. TRENCHES 3-26
A. Gravity Sewers 3-26
B. Force Mains 3-27
3.15. PROTECTION OF EXISTING UTILITIES 3-27
3.16. TRENCH PROTECTION 3-28
3.17. PIPE EMBEDMENT 3-29
A. General 3-29
B. PVC Pipe 3-29
3.18. PIPE LAYING 3-29
A. Gravity Sewers 3-29
B. Force Mains 3-30
3.19. BACKFILLING 3-31
3.20. CONNECTIONS TO STRUCTURES AND PIPES 3-32
3.21. ROCK EXCAVATION 3-33
A. General 3-33
B. Excavation 3-33
C. Disposal Of Rock 3-33
D. Damage To Existing Facilities 3-33
3.22. SERVICE CONNECTIONS 3-33
3.23. PUMPING STATION INSTALLATION 3-34
A. Sitework Description 3-34
B. Earthwork 3-35
C. Influent Sewer 3-34
D. Excavation And Backfill 3-34

III. TESTING 3-35

3.24. TESTING FOR DEFLECTION (GRAVITY SEWERS) 3-35

3.25. TESTING FOR LEAKAGE (GRAVITY SEWERS) 3-36

A. General 3-36

B. Exfiltration Tests 3-37

3.26. PRESSURE AND LEAKAGE TEST (FORCE MAINS) 3-37

3.27. TESTING FOR PUMPING STATIONS 3-38

A. Wastewater Pumps Testing 3-38

B. Pump Draw-Down Test 3-39

C. Pressure And Leakage Tests 3-39

3.28. TELEVISION INSPECTION 3-39

3.29. COMPLETION OF TESTS 3-40

FIGURES

Figure 3.5.1 BORING AND STEEL ENCASEMENT PIPE DETAILS

Figure 3.6.1 TYPE “A” CONCENTRIC MANHOLE DETAIL

Figure 3.6.2 TYPE “B” CONCENTRIC MANHOLE DETAIL

Figure 3.6.3 SHALLOW PRECAST MANHOLE DETAIL

Figure 3.6.4 CUT-IN MANHOLE DETAIL

Figure 3.6.5 SAMPLING AND METERING MANHOLE

Figure 3.8.1 DROP CONNECTION OUTSIDE FOR PROPOSED MANHOLES

Figure 3.9.2 500 GALLON GREASE TRAP

Figure 3.9.3 OIL SEPARATOR

Figure 3.10.2 DIP RISER DETAIL FOR SEWERS > 10’ DEEP

Figure 3.11.1 AIR RELEASE & MANHOLE DETAILS

Figure 3.12.4 ACCESS ROAD TYPICAL SECTION

Figure 3.14.1 SANITARY CONNECTION DETAILS – REPLACEMENT & MODIFICATION

Figure 3.14.2 SEWER LATERAL DETAIL

Figure 3.14.3 FIELD TEE CONNECTION

Figure 3.14.4 SANITARY SEWER CREEK CROSSING DETAIL

Figure 3.14.5 MOBILE HOME TRAILER PAD SANITARY CONNECTION

Figure 3.14.6 CUT-IN DETAIL FOR DIP, PVC, & VCP SERVICES

Figure 3.14.7 FLEXIBLE GASKET DETAIL

Figure 3.14.8 LATERAL INSPECTION PORT DETAIL

Figure 3.14.9 6” PVC TO ORANGEBURG PIPE CONNECTION

Figure 3.15.1 SUPPORT OF UTILITIES PERPENDICULAR TO EXCAVATION

Figure 3.17.1 TRENCH AND BEDDING DETAILS

Figure 3.17.2 STANDARD FLEXIBLE PIPE TRENCH AND BEDDING DETAILS

SECTION 3 - SANITARY COLLECTION

GENERAL REQUIREMENTS

The design of sanitary facilities shall comply with the "Recommended Standards for Wastewater Facilities" (10 States Standards) latest edition and OEPA requirements. The minimum diameter for a sanitary sewer main shall be 8 inches. The minimum diameter for a service connection shall be 6-inch. The slope of the sanitary sewer main shall be determined so as to provide a minimum velocity of two feet (2') per second when the sewer is flowing half full. The minimum slope is not to be less than 1.0% for 6-inch pipe, 0.4% for 8-inch pipe, 0.28% for 10-inch pipe, 0.22% for 12-inch pipe and 0.15% for 15-inch pipe using Kutter's "n" value of 0.013. Any sanitary sewer main which cannot be extended shall be 8-inch pipe with a slope of 1.0% for a minimum of 100-feet. The allowable pipe loading shall be computed by using the maximum trench width from Paragraph 3.01.A. as appropriate, and an "ordinary bedding" condition.

Soil borings shall be performed by an Ohio Registered Professional Engineer for all proposed sanitary sewers. Soil borings shall extend a minimum depth of 5 feet below the sewer invert. Submit soil reports to the LCDU for review.

All materials shall be manufactured in the United States of America wherever available.

Concrete work shall be as specified in the project plans.

All work shall conform to the General Requirements in Section 1 for pavement replacement, seeding, restoration, landscaping, etc.

DESIGN PLANS

3.00 Sanitary Plan Criteria

A. General Sanitary Sewer Notes - LCDU - See Exhibit B at the end of Section 3.

B. General Sanitary Sewer Service Connection Procedures- LCDU- See Exhibit C at the end of Section 3.

C. Provide manhole numbers with rim and invert elevations.

D. Connections with sanitary sewers constructed under this article shall be subject to all the requirements of Item 1.46 of these rules, regulations, procedures and general specifications.

1. The sanitary sewer shall be disconnected, and capped and inspected to ensure no leaks prior to deleting the account. A minimum charge shall remain until the service is properly capped. No new connection to a sanitary sewer main shall be permitted until arrangements have been made for properly abandoning all unused sanitary sewer lateral services on a site.

2. The sanitary sewer shall be disconnected and capped in accordance with 3.21.1 and inspected to ensure no leaks prior to deleting the account.

E. Application of Billing Rules - Rules pertaining to water billing shall also be applied to sanitary or solid waste billings.

F. Label proposed lines: length, size, slope and material.

G. Include a manhole at the point where the lateral leaves the property on service connections for non-residential projects.

H. Sanitary sewer on private property are owned and operated by the property owner or owners. Plans for condominium projects and sanitary sewer and/or water line projects on private roads shall include a copy of a Reserve Fund Affidavit establishing exclusive funds of $15,000 for water repairs and/or $15,000 for sanitary sewer repairs. The reserve fund or funds shall be administered by the condominium association or a homeowner association. The affidavit shall include a means to replenish said funds after any needed repairs are made. No reduction in the reserve fund or funds shall be made nor shall this reserve fund provision be amended or removed from the Condominium or Homeowners Association By-Laws, without the consent of the Lake County Department of Utilities.

I. MATERIALS

3.01. PIPE AND FITTINGS

I. Gravity Sewers

1. Requirements - Pipe, fittings, and appurtenances shall conform to the latest edition of the referenced Standards.

Gravity Sewers 15-inch diameter and smaller shall be vitrified clay pipe ASTM C700 Extra Strength, PVC SDR26 per ASTM D3034, or PVC Composite (Truss Pipe) per ASTM D2680 or F679, or class 52 ductile iron pipe. The minimum size of sewer mains shall be eight inches (8") inside diameter. Gravity Sewers 16-inch diameter and larger may be any of the types as specified herein.

Gravity Sewer mains with less than five feet (5') of cover shall be ductile iron pipe. Mains with between five feet (5') and sixteen feet (16') of cover shall be PVC SDR26, vitrified clay pipe, concrete pipe, PVC Composite, or ductile iron pipe. Mains with sixteen feet (16') of cover or greater shall be PVC SDR26, vitrified clay pipe, concrete pipe, or ductile iron pipe. Cover shall be defined as the distance from top of pipe barrel to finished grade. All sewer runs and fittings from manhole to manhole must be of the same pipe material.

Service connections with less than three feet (3') of cover in non-pavement areas shall be ductile iron pipe. Service connections with less than four feet (4') in pavement areas shall also be ductile iron pipe. Service connections in greater depths of cover may also be PVC or vitrified clay pipe.

The LCDU may require additional testing on any pipe at any time and at the manufacturer's expense. All pipes, fittings and appurtenances shall be appropriately marked for purposes of identification. All pipe spigots shall have a "home" mark to facilitate joint closure. All sewer pipe shall be marked in accordance with the applicable ASTM standard specification. Intervals shall not exceed 5 feet.

2. PVC Plastic Pipe and Fittings - PVC plastic pipe and fittings shall meet the requirements of ASTM D2412, and, as applicable for the sizes involved, shall meet the requirements of ASTM D3034, ASTM F679 (T-1 wall) and ASTM F789 (T-1 wall, PS-46). The pipe shall be of the elastomeric gasket joint (integral bell) type. Joints shall provide a watertight seal and shall be made in

accordance with the pipe manufacturer's instructions. Joints shall be of the integral bell push-on type meeting the requirements of ASTM D3212, and, in addition, the bell shall be designed to retain the gasket to prevent pullout during the making of the joint. Solvent cemented joints shall not be used. Gaskets shall be part of a complete pipe section and purchased as such. Lubricant shall be as recommended by the pipe manufacturer, but shall be of the type that contains no petroleum. The Contractor may be required to furnish evidence of satisfactory performance of the joint from previous installations.

PVC material shall have a cell classification of ASTM 12454 as defined in ASTM D1784. No fillers or extenders, other than those required under the approved cell classification, shall be added to the PVC resin and other than those ingredients normally required for lubrication, stabilization, resin modification and pigments essential for processing, property control or coloring. All PVC sanitary sewer piping shall be green in color to coincide with the Ohio Utilities Protection Service color-coding. Six-inch lateral house or unit connections or fittings need not be green in color.

PVC plastic pipe may be used in residential, nonresidential and industrial sanitary sewer projects as designated on project drawings and/or as approved by the LCDU. An Ohio Registered Professional Engineer shall prepare and submit for approval by the LCDU, complete design calculations showing the suitability of PVC pipe to each project both hydraulically and structurally. No other pipes, conduits, utilities, structures, etc. shall be designed or permitted within the trench limits as actually constructed.

PVC pipe manufacturers shall be pre-qualified by submitting certified test results to the LCDU as set forth in ASTM D3034.

All pipe shall be delivered to the jobsite from the factory and stored at the jobsite in palletized units or bundles not more than sixty inches (60”) high and remain palletized until the day of installation. Pipe bent, deflected or otherwise damaged during shipping shall be rejected and ordered removed from the project site.

UV (ultraviolet) radiation degradation evidenced by discoloration of the pipe, occurring in any pipe segment prior to installation shall be cause for rejection and removal of the pipe. Pipe stored on the jobsite with exposure to direct sunlight shall be covered with canvas or other opaque material to protect it from the sun’s rays. Air circulation shall be provided under the covering. The pipe date of manufacturing shall be no more than one year prior to delivery to the jobsite. The date of manufacture shall be stamped on the pipe.

All pipe and fittings shall be inspected by a LCDU authorized representative immediately prior to installation and all rejected pieces shall not be used and must be completely removed from the project site. No repairs of pipe or fittings shall be allowed; undamaged lengths of straight pipe may be salvaged by neatly sawing off the damaged portion of the pipe. All PVC pipe shall be marked in accordance with the applicable ASTM standard specification. Intervals shall not exceed 5 feet.

Maximum pipe length shall have a nominal laid length of fourteen (14) feet. Maximum allowable ordinate as measured from the concave side of the pipe shall not exceed one-sixteenth (1/16”) inch per foot in length when measured on accordance with ASTM 2112, but in no event shall the deviation from straight be more than 1” for any length of PVC.

Latitudes in workmanship and finish allowed by the related ASTM standard notwithstanding, all pipe shall have smooth exterior and interior surfaces, be first quality, be free from cracks, blisters and other imperfections and be true to theoretical shapes and forms throughout each length.

PVC plastic fittings for use with ASTM D3034 pipe 8 inch in size and smaller shall meet the requirements of ASTM D3034 with a minimum wall thickness of SDR 26 as defined in the ASTM standard section 7.4.1, and shall be molded in one piece with elastomeric joints and minimum socket depths as specified in the ASTM standard sections 6.2 and 7.3.2. Saddles shall not be permitted on new installations. Connections to existing PVC sewers shall be as approved by the LCDU. All fittings shall be compatible with the pipe to which they are attached or adapters approved by the LCDU shall be furnished to connect the pipe to the fittings. Gaskets shall have minimum cross sectional area of 0.20 sq. in. and shall meet the requirements of ASTM F477.

PVC plastic fittings for use with ASTM D3034 pipe 10 inch in size and larger, and for use with all sizes of PVC plastic pipes other than ASTM D3034 shall be molded or fabricated in accordance with, and have joints meeting the requirements of the ASTM Standard as specified for the pipe.

At the end of all fittings, pipes, or pre-manufactured tees installed for service connections, the final fitting at the "plug" shall be SDR 26 compatible. Non-compatible joints shall be made to existing pipe using banded neoprene couplings as listed in The LCDU Approved Materials List.

The pipe shall be installed in accordance with ASTM D2321, and with the requirements of these specifications. Any requirements in these specifications which may be in conflict or inconsistent with the requirements of ASTM D2321 shall be void to the extent of such conflict or inconsistency, except in all cases material for pipe embedment shall be as subsequently specified in Item 3.13. PVC plastic pipe shall be tested for deflection as subsequently specified in Division III of this section.

For pipes installed in open trench, the maximum allowable trench width at the top of the pipe for the various sizes and classes of pipe shall be as follows:

MAXIMUM TRENCH WIDTH (As measured at top of pipe)			
Pipe Diameter	Trench Width	Pipe Diameter	Trench Width
6”	2'-3"	21"	3'-6"
8”	2'-3"	24"	4'-0"
10"	2'-6"	27"	4'-3"
12"	2'-9"	30"	4'-9"
15"	3'-0"	33"	5'-0"
18”	3’-3”	36”	5’-6”

3. Concrete Pipe and Fittings - Concrete pipe and fittings shall be of the spigot and socket pattern meeting the requirements of ASTM C76 and shall be Class IV or V. Pipes shall be of the greatest lengths commercially available. Circular pipes having elliptical reinforcing shall have the

word “Top” or “Bottom” clearly stenciled on the inside of the pipe at the correct place to indicate the proper position when laid. Joints shall be of the rubber gasket type meeting the requirements of ASTM C443. The gasket shall be confined in a groove and shall be installed in accordance with the manufacturer’s instructions.

Branches on fittings in the main line for connections shall be of the same material as the pipe that will be connected. The branches shall be cast with the concrete pipe by the pipe manufacturer and shall not be done in the field. The joint in the branch shall be as specified for the respective type of pipe.

For pipes installed in open trench, the maximum allowable trench width at the top of the pipe for the various sizes and classes of pipe shall be as follows:

MAXIMUM TRENCH WIDTH (As measured at top of pipe)		
Pipe Diameter	ASTM C76-CLASS	
(inches)	IV	V
18	3’-3”	3’-6”
21	3’-6”	3’-9”
24	4’-0”	4’-3”
27	4’-6”	4’-9”
30	4’-9”	5’-0”
33	5’-3”	5’-6”
36	5’-9”	6’-0”
42	6’-3”	6’-6”
48	6’-9”	7’-0”
54	7’-6”	8’-0”
60	8’-0”	8’-6”
66	9’-0”	9’-6”
72	9’-6”	10’-0”

4. PVC Composite and Solid Wall Pipe and Fittings – Pipe and fittings 15 inches in diameter and smaller may be PVC composite pipe and fittings meeting the requirements of ASTM D2680 or F679. Pipe fittings shall be PVC plastic pipe fittings as specified in Paragraph 3.01.A.2.

Joints shall be of the premium O-ring joint type. Joints shall provide a watertight seal and shall be made in accordance with the pipe manufacturer's instructions.

Pipe shall be installed in accordance with ASTM D2321 and the requirements of these specifications. Any requirements in these specifications which may be in conflict or inconsistent with the requirements of ASTM D2321 shall be void to the extent of such conflict or inconsistency, except in all cases material for pipe embedment shall be as subsequently specified in Item 3.13. Solid wall pipe shall be tested for deflection as subsequently specified in Division III of this section.

For the purpose of establishing limits for the payment of items based upon trench width, the maximum allowable trench width at the top of pipe for the various sizes of pipe shall be in accordance with the following table. The actual trench width used for installation may be in accordance with ASTM D2321.

MAXIMUM TRENCH WIDTH (As measured at top of pipe)	
Pipe Diameter	Trench Width
8”	2'-3"
10"	2'-6"
12"	2'-9"
15"	3'-0"

5. Vitrified Clay Pipe and Fittings – Vitrified clay pipe shall be of the best quality full diameter unperforated, salt-glazed, ceramic glazed or unglazed pipe of the bell and spigot pattern meeting the requirements of ASTM C700 Extra Strength. Joints shall meet the requirements of ASTM C425 and shall be made in strict accordance with the pipe manufacturer’s instructions. Fittings shall meet the same requirements as specified for the pipe.

For pipe installed in open trench, the maximum allowable trench width at the top of the pipe for the various sizes of pipe shall be as follows:

MAXIMUM TRENCH WIDTH (As measured at top of pipe)			
Pipe Diameter	Trench Width	Pipe Diameter	Trench Width
6”	2’-8”	21"	4’-2”
8”	2’-10”	24"	4’-6”
10"	3’-1”	27"	5’-4”
12"	3’-3”	30"	5’-6”
15"	3’-7”	32”	5’-8”

6. Ductile Iron Pipe and Fittings – Ductile iron pipe shall be designed in accordance with AWWA C150 and manufactured in accordance with AWWA C151 and shall be Thickness Class 52 minimum. The pipe shall be of the push-on joint or mechanical joint type, with joints within the lengths noted on the drawings to be restrained type joints. Furnish the LCDU with calculations to support lengths of restrained joint pipe to be used at all fittings. All pipes shall be coated with a bituminous material on the outside and shall be cement mortar lined during fabrication in accordance with AWWA C104. Pipe shall be furnished in minimum 18-foot lengths unless otherwise specified.

Fittings shall be of ductile iron, shall conform to AWWA C153, and shall be factory coated and lined and have joints as specified for the pipe.

Mechanical joints and push-on joints shall be in accordance with AWWA C111, incorporating rubber gaskets. With push-on joints, the surfaces to be in contact with the rubber gasket shall be wiped clean and dry just prior to making the joint and, when making the joint, a lubricant shall be used in accordance with the

manufacturer's recommendations. With mechanical joints, the surfaces to be in contact with the rubber gasket shall be brushed with soapy water to remove all sand and grit just prior to making the joint.

Whenever it is necessary to cut the pipe at fittings, valves, specials or elsewhere, the remaining portions may be used where possible to minimize the number of scrap pieces when the project is complete; however, scrap pieces less than 5 feet in length shall not be used. Cut pieces of pipe shall be beveled to manufacturer's specifications.

J. Replacement Of Existing Sewers And Drains – The Contractor is cautioned to use the greatest care in reporting to the LCDU all existing sewers and drains exposed during trenching or other operations. Replacements shall be made in accordance with all applicable requirements of these specifications for new construction and in accordance with all applicable requirements of ODOT Item 603 using pipe with premium joints unless otherwise specified, as approved by the LCDU. In the event of conflict, the requirements of these specifications shall take precedence.

Pipe for sanitary sewers shall be approved for such use. Replacements 12 feet or less in length of perforated pipe or open joint tile (underdrains) shall be made by using PVC plastic pipe meeting the requirements of ASTM D3034, SDR35, or F679 based on diameter, as specified in Paragraph 3.01.A. In any event, all such replacements in cultivated fields shall be with the specified perforated pipe. Drain discharges removed at ditches or other watercourses shall be replaced with one standard length of reinforced concrete pipe, or as otherwise approved by the LCDU. Joints between existing and replacement pipes, when of differing materials or with otherwise non-compatible joints, shall be made using banded neoprene couplings as listed in The LCDU Approved Materials List.

Existing sewers and drains shall be replaced so as to withstand future settlement by bridging with hardwood supports a minimum of 6 inches square or the use of CL 52 DIP. Bridging shall extend into undisturbed earth a minimum of 12 inches each side of the trench, and the pipe, tile, etc., banded or tied with stainless steel to the bridging for its full length. Where hardwood bridging cannot be supported by a firm foundation, the Contractor shall provide vertical support for the hardwood bridging, including any lateral bracing necessary to provide a firm and substantial support. Supports and bracing shall be of native hardwood.

K. Force Mains (Diameters greater than 2-inches) – Pipe, fittings and appurtenances shall conform to the latest edition of the referenced Standards. All force mains shall be constructed of ductile iron pipe Class 52 minimum in accordance with Paragraph 3.01.A.6. or HDPE DR9 (ASTMF714 ASTM F2620)with heat fused joints and tracer wire. All force mains shall enter the manhole at the same flow line elevation as the main sewer where the main sewer leaves the manhole and shall be directed downstream.

The manufacturer shall furnish an affidavit indicating that all pipe, fittings and appurtenances have been manufactured and tested in accordance with the requirements of the applicable referenced Standards. A copy of the affidavit, indicating the project on which the material is to be used, shall be forwarded to the LCDU prior to construction. Restrained joint lengths shall meet Ductile Iron Pipe Research Association

(DIPRA) minimum lengths recommended. Restrained push-on joints shall be completely boltless and shall be a manufacturer listed in The LCDU Approved Materials List. Field-loc type restrained joints are acceptable for gravity sanitary sewer applications only. Restrained mechanical joints shall be of the pipe manufacturer's standard design, or shall be a manufacturer listed in The LCDU Approved Materials List, of ductile iron and with a working pressure of at least 250 psi and a minimum safety factor of 2:1.

All pipe, fittings and appurtenances shall be appropriately marked for purposes of identification. The materials and methods of manufacture, and the completed pipes, fittings and appurtenances shall be subject to inspection and rejection at all times. The LCDU shall have the right to make inspections.

L. Small Diameter Force Mains for Privately Operated Pump Stations (Diameters 2-inches and less)– Small diameter force mains for privately operated pump stations may be constructed of HDPE DR 11, (ASTM D2737) Schedule 120 PVC; (ASTM 1785). Tracer wire shall be included with installation. Pipe size shall be a determined by the pump manufacturer.

3.02. POLYETHYLENE ENCASEMENT

Contractor and/or developer is responsible for coordinating with the Ductile Iron Pipe Research Association (DIPRA) to test the project site to determine the corrosiveness of the soil and the need for polyethylene encasement. Report shall be submitted to the LCDU for determining the need, if any, to wrap the pipe.

Ductile iron pipe, fittings and appurtenances shall be field wrapped with a minimum 8-mil thick polyethylene tube meeting the requirements of AWWA C105 as directed by the LCDU. Installation shall be in accordance with Method A and the instructions of the manufacturer. All overlaps and seams shall be completely taped. All rips, punctures and other damage to the polyethylene shall be repaired per Method A. Tape shall be 2-inch wide plastic backed adhesive tape that will bond securely to both metal surfaces and the polyethylene film.

3.03. PIPE INSULATION

Provide minimum 1-inch cellular glass insulation with an aluminum jacket, adequate to prevent freezing at zero degrees Fahrenheit, suitable for burial. Insulation shall be a product of the manufacturers listed in The LCDU Approved Materials List or as approved.

Provide insulation in any area where the depth of cover, horizontal on slopes or vertical, is less than or equal to 4’-0" for force mains and/or pumping station piping. Install pipe insulation and jacketing per manufacturer’s recommendations, and to prevent entry of water between the pipe and insulation.

3.04. PIPELINE MARKERS

Provide pipeline markers for sanitary sewer installation in railroad or highway right-of-ways or in easements other than maintained residential yards or as required by the LCDU.

In railroad or highway right-of-ways, furnish and install prominent durable, weatherproof signs located over the centerline of the pipe at each right-of-way line, and along the pipeline in the right-of-way for

longitudinal occupancy. Signs shall show the name and address of the Owner, contents of the pipe, pressure in pipe, pipe depth below grade at the sign and an emergency telephone number in the event of pipe rupture. The signs shall be acceptable to the railroad company or highway department.

In easements other than railroad or highway right-of-way, furnish and install prominent, durable weatherproof signs located over the centerline at each end of the easement and along the pipeline in the easement. Signs shall have the word SANITARY permanently imprinted on them, and shall be a product of the manufacturers listed in The LCDU Approved Materials List or as approved; and shall comply with APWA/ULCC color coding for utility locating.

Signs shall be located at each right-of-way line, at beginning of easements, at each manhole location and at 500-foot intervals along the pipeline outside the public right-of-way, or such shorter interval to allow sight distance between two consecutive marker signs.

3.05. STEEL ENCASEMENT PIPE

Where shown on plan/profile drawings and/or as required, the pipe shall be installed within welded steel encasement pipe. The encasement pipe shall meet the requirements of ASTM A139, Grade B, and shall be bituminous coated on the outside. Any coating applied in the field shall be applied a minimum of 48 hours prior to installation. The encasement pipe diameter shall be six inches larger than the diameter of the pipe bell, rounded up to the next nominal pipe size. The minimum wall thickness of the encasement pipe shall be 0.375-inches and is based on steel pipe having a minimum tensile strength of 60,000 psi and a minimum yield strength of 35,000 psi. The wall thickness shall be adjusted as necessary for other grades of pipe. All joints shall be fully welded on the circumference.

The encasement pipe shall be installed by boring and jacking and in such a manner so as to allow the pipe to be laid at the grade shown on plan/profile drawings or as required. Boring and jacking operations shall be continuous. The pipe shall be blocked in place within the encasement pipe to prevent shifting or flotation. The ends of the encasement pipe shall be blocked up in such a way as to prevent the entrance of foreign material, but allowing leakage to pass in the event of the same within the encasement pipe. See Figure 3.5.1.

Blocking shall be accomplished using wood blocks or approved casing chocks. Wood blocking shall be as shown on the drawings and used only as approved. Wood blocks shall be of hardwood lumber. Banding straps for holding the wood blocks in place shall be of stainless steel. Casing chocks shall be of polyethylene or stainless steel with a liner and UHMW polymer plastic runners, shall be a product of the manufacturers listed in The LCDU Approved Materials List or as approved, and shall be installed in accordance with the manufacturer's instructions. Hardwood blocking shall be notched to secure banding to blocking without slipping off. Three sets of blocks or chocks shall be used per pipe segment. See Figure 3.5.1.

The annular space between the encasement pipe and the carrier pipe shall be filled with either grout or blown in dry sand.

The Owner will secure all necessary permits for boring pipe, but the Contractor shall pay the cost of

all necessary inspection, insurance, etc. No work shall begin until a permit, if required, has been issued. The LCDU shall either secure upfront the cost of all necessary inspections, insurances, etc., or shall withhold monies due to Contractor for same until satisfactory proof is received from Contractor that all costs have been paid. The Contractor shall be responsible for meeting the requirements of the governing authority, which may include approval of equipment to be used, for installation of the encasement pipe and for providing same with the required notification prior to the start of such work. The LCDU shall not be responsible for any additional cost to the Contractor as the result of the Contractor's failure to meet any of the governing authorities requirements.

Steel encasement pipe in and across railroad right-of-ways shall meet the requirements of the railroad company. Steel encasement pipe in and across highway right-of-ways shall meet the requirements of the appropriate highway department.

3.06. MANHOLES

M. Description - Manholes shall be constructed of precast reinforced concrete sections and appurtenances meeting the requirements of ASTM C478, except as modified by these specifications and the details on the drawings, and shall be complete with required pipe sewer stubs. Manholes shall have a minimum 48-inch I.D. or larger as recommended by the manufacturer. An affidavit from the manufacturer shall be provided stating that the manhole is appropriately sized for the sizes and angles of incoming pipes. Manholes shall not be spaced greater than 350 feet on sewers 24 inches and less in diameter and 450 feet on sewers greater than 24 inches in diameter.

The LCDU may require anti-flotation pads for manholes, upon review of the required soil borings.

N. Bases - Bases shall be constructed monolithically with bottom reinforcement tied to side reinforcement to form an integral structure. Walls shall have a minimum thickness of 1/12 the base I.D. plus 1 inch.

Bases shall incorporate provisions for making a flexible joint between the pipe and the manhole for all pipe connections. Flexible joints shall be a product of the manufacturers listed in The LCDU Approved Materials List. Flexible joints shall be shock absorbent and shear resistant; shall be designed to prevent any direct contact between the pipe and manhole; and shall provide a tight, infiltration proof sewer connection with the pipe deflected up to 10 degrees in any direction. Should incorporation of the flexible joints require a base I.D. greater than required for the wall sections, the Contractor shall furnish and install the larger base and an approved precast reinforced concrete transition section to go from the larger base to the wall sections at no additional cost to the LCDU.

Drop pipes shall be included in the invert and shall not discharge on the sloped portion. Refer to Item 3.08 and Figure 3.8.1. All drops shall be outside the manhole.

Bases shall be set plumb and at the proper elevation on a cushion of compacted granular material as approved by the LCDU

O. Walls And Tops - Walls shall be vertical riser sections having a minimum wall thickness of 1/12 the base I.D. plus 1 inch. The top section shall be a concentric cone narrowing down to an I.D. of not less than 24 clear inches and an O.D. of not less than that of the subsequently specified grade rings. No pipes shall enter the cone section. See Figure 3.6.1 for Type "A" manhole details, Figure 3.6.2 for Type "B" manhole details and Figure 3.6.3 for shallow manhole details. Manholes too shallow to accommodate a cone section shall have a reinforced flat slab top. Flat slab tops shall be designed to withstand H-20 traffic loading and design calculations shall be submitted to the LCDU.

Adjoining riser sections shall be firmly keyed together by means of tongue and groove joints with rubber gaskets meeting the requirements of ASTM C443. In addition, preformed plastic gasket material shall be provided on the outside shoulder of all joints. Installation of the gasket material shall not interfere with the proper sealing of the gasket. The preformed gasket material shall meet the requirements of Federal Specification SS-S-210A and shall be a product of the manufacturers listed in The LCDU Approved Materials List.

Each manhole frame shall be set at the proper elevation, finished grade, or as otherwise noted, by use of precast concrete grade rings. The rings shall be provided for a minimum height of 3 inches and shall not exceed 12 inches in height. Rings, unless otherwise subsequently specified, shall have an I.D. equal to the access opening in the manhole top section, and an O.D. not less than the O.D. of the manhole frame. The rings shall each be on 2 tar strips with minimum 1"x1" size. The interior of the grade rings shall be mortared to provide a smooth common surface from frame to top.

When the manhole frame is to be anchored to the manhole top, as subsequently specified in Item 3.07, the top section and grade rings shall have four 1 inch diameter holes located to match the holes in the casting and shall be of such dimensions as to provide a minimum 2 inch concrete cover for the 1 inch diameter holes. Holes in the top section shall extend at least 6 inches into the concrete. Holes shall not be made in the field.

P. Chimney Seals –All manholes shall have external manhole chimney seals as approved by the LCDU installed per the manufacturer's recommendations. Chimney seals shall be a product of the manufacturers listed in The LCDU Approved Materials List of the LCDU Rules and Regulations. It shall be required for all street rehab projects that the brickwork above the manhole cone section be replaced and that a chimney seal be installed on manholes where a grade adjustment of the casting is preformed.

Q. Steps - Steps shall be provided in all manholes. Manhole steps shall be Neenah R-1980-E castings or reinforced polypropylene construction. Installation of manholes, when in pavement, shall be such that steps are in the center of a traffic lane or between lanes where possible, and, when outside pavement, shall be such that steps are located away from the pavement edge unless the manhole is within a ditch line, in which case they shall be located at the high side of the ditch slope.

Reinforced polypropylene steps shall meet the requirements of ASTM C478.Reinforced polypropylene steps shall consist of a 1/2 inch steel reinforcing rod encapsulated in a copolymer

polypropylene plastic and shall incorporate a notched tread ridge and retainer lugs on each side of the tread ridge. The steel rod shall be continuous through the entire length of legs and tread. Steps of the press fit type driven into the concrete wall shall have a pullout resistance of not less than 1,500 pounds per leg, as evidenced by test data.

R. Pipe Sewer Stubs - Where noted, pipe sewer stubs shall be provided at manholes for future sewer connections. The stubs shall be of the same type of pipe as being provided on the Project for the respective sizes of pipe, shall be 2'-0" in length outside the manhole wall, and shall terminate with a full pipe bell. Installation shall be as specified in Division II of this section. The end of each stub shall be provided with a pipe stopper (plug) specifically designed for use with the pipe. Plugs shall be for permanent or temporary use, shall be watertight, and shall be removable without damaging the pipe.

3.07. FRAMES AND COVERS

All frames and covers shall be heavy-duty gray iron castings conforming to ASTM A48. Both the underside of the cover and the upper surface of the ledge upon which it rests shall be machined so as to prevent rocking on its supporting surface. All castings shall be cleaned and coated with asphalt paint prior to installation.

The frames shall have a clear opening of not less than 24 inches in diameter and a height of not less than 7 inches. Covers shall have strengthening ribs on the underside. No frame and cover unit shall weigh less than 375 pounds. Covers shall be solid and have the words “sanitary sewer” cast on top.

Manhole frames and covers shall be the products of the manufacturers listed in The LCDU Approved Materials List.

The manhole frames shall be firmly set on top of the adjusting rings with 2 tar strips with minimum dimensions of 1” x 1” butyl rope. Where manholes are located in paved areas, the surface of the cover shall be made flush with the pavement surface. In unpaved streets and alley areas, the cover shall be set not to exceed 3 inches above the ground surface. In right-of-way and in ditches cover elevation shall be as approved by the LCDU.

3.08. DROP CONNECTIONS

Drop connections shall be constructed at all points where one gravity sewer intersects another and the difference in invert elevations exceeds 24 inches. New manhole drop connections shall be pre-cast outside drops integrally encased in concrete attached to the manhole. Pipe encased may be SDR26 or D.I.P. Drop connections to existing manholes can be field constructed per detail 3…. Internal drops are prohibited. The drop connection shall consist of a tee at the upper end connected into the manhole, a vertical section of pipe, and a 90-degree bend at the lower end connected into the manhole at the lowest pipe invert. The diameter of the drop connection shall be two sizes smaller than the main sewer, but in no case shall it be less than 6 inches. Provide an approved removable watertight plug in the upstream end of the tee, when not immediately connected to a sewer. See Figure 3.8.1.

3.09. SERVICE CONNECTIONS

Service connections for sanitary sewers shall be 6 inches in diameter, unless otherwise shown, shall be solid wall SDR 26 PVC, or extra-strength vitrified clay pipe and class 52 ductile iron pipe, and shall be furnished and installed in the public right-of-way or easements for existing and future residential and non-residential structures.

A separate and individual service connection shall be made to each parcel. No sanitary sewer connection shall be made to a residential or non-residential structure for which the rough interior plumbing has not been completed, inspected and approved by the proper authority. All service connections for single family and 2 unit residential properties shall include a cleanout (see Fig. 3.14.8) located as close as possible to the right of way line and/or public easement line extended to 12" inches below finish grade and marked with a metal locator disk. All service connections to nonresidential and multi unit residential properties of greater than two (2) units, shall include a typical manhole located at the front property line, extended flush with the finish grade. The connection between the interior plumbing and the sanitary sewer service connection shall be made at a point approximately three feet outside the foundation wall. Locations and depths of service connections shall be shown on the drawings. Final locations and depths will be established by the LCDU at the time of construction.

Connections to the main sewer shall include the furnishing and installation of an appropriate tee in the new sewer installed at a minimum 45˚ angle vertically. Adaptors shall be used to connect between dissimilar pipe sizes or joints between (a) lateral and branch of tee in main, (b) house connection and lateral, and (c) cast iron pipe and house connection. If adaptors are not available, where the soil pipe and house connection pipe are to be connected, adequate concrete encasement will be required.

Grinder pump outlet force main piping shall be PVC Schedule 120. Force main shall terminate at a clean out manhole to be located on the customer's premises.

All service connections shall be performed by a licensed Sewer/Water Contractor.

New service connections shall be connected into existing sanitary sewers where approved by means of positively sealing connections. Connectors shall be of materials such as rubber gaskets, sleeves, etc. with or without stainless steel clamps, bolts, etc. that will not erode over time. Connectors shall be designed specifically for the application intended. Service connections into existing sanitary sewer shall use sewer saddles or tees produced by the manufacturers listed in The LCDU Approved Materials List. The Contractor shall clean the entire section (manhole to manhole) of the existing sanitary sewer prior to the installation of the service connection.

Where service connections are to be installed to the property line, the pipe shall be installed true to line, perpendicular to the mainline. The tee shall be installed at a minimum 45˚ angle vertically with no exceptions. Service connections greater than 300 feet in length shall provide for maintenance access. Residential service connections shall place cleanout(s) (see Figure 3.14.8) at a minimum of 1 per 300 feet of lateral pipe. Non-Residential service connections shall place standard or shallow manhole(s) at a minimum of 1 per 300 feet of pipe.

Except where otherwise specifically required or permitted by the LCDU, service connections shall be installed by open cut excavation. The requirements for construction shall, in all respects, comply with those specified in this Section for the main sewers.

Gravity basement service is only permitted when the following criteria are met. The lowest floor level of the building being served by gravity shall be an elevation higher than the nearest public sanitary manhole rim. Gravity sanitary service shall be prohibited to any floor level where the elevation is lower than the nearest sanitary manhole rim elevation.

Approval for basement gravity service shall be obtained from sanitary engineer based on site plan elevations as prepared by a licensed professional surveyor and verified after finished floor is poured prior to issuance of sanitary connection permit.

In general, riser sections will be required between the main line sewer connection and that portion of the service connection installed on at least a 1% grade where depths to the main sewer invert exceed 12 feet. Riser pipe shall be defined as the vertical pipe, plus all pipe and fittings required between the vertical pipe and the connection at the main sewer. The riser shall be fixed in place for its full height by providing thoroughly tamped ductile iron pipe embedment material. See Figure 3.10.2.

Where required, service connections shall be installed within steel encasement pipe. Steel encasement pipe shall extend 5 feet each side of the pavement. Steel encasement pipe shall be as previously specified in Item 3.05, with the encasement pipe to be sized for at least 6 inches clearance around the pipe bell, and the minimum wall thickness shall be 0.375 inch.

Service connections not immediately connected to an existing sewer shall be closed with a stopper. Stoppers shall be specifically designed for use with the pipe, shall be for use as a permanent or temporary plug, shall be watertight, and shall be removable without damaging the pipe. Pipe damaged when installing or removing stoppers shall be replaced at the expense of the Contractor.

The ends of service connections shall not be backfilled until the location is referenced in accordance with Figure 3.14.2. A 2-inch square oak pole shall be accurately placed over the termini of all such service connections and shall extend vertically to flush with the surface of the ground so that it can be located.

NO SERVICE CONNECTIONS SHALL BE TIED INTO THE SANITARY SEWERS PRIOR TO THE LCDU RECEIVING AND APPROVING RECORD DRAWINGS FOR THE SANITARY SEWER INSTALLATION.

3.10. COMBINATION AIR RELEASE/ VACUUM VALVES AND MANHOLES.

A. Requirements – Each combination air release/ vacuum valve shall be installed in a manhole, and shall be screw connected into a tapped blind flange on an appropriate fitting in the force main line with required lengths of stainless steel pipe and fittings. See Figure 3.11.1.

B. Combination Air Release/ Vacuum Valves - Air release valves shall be installed at high points in the force main to permit the automatic or manual, release or drawing in of air when the main is being filled and during service by operation of the valve. The valve shall be sized based on the force main

diameter and operating conditions, with a 2-inch valve the minimum and by a manufacturer listed in The LCDU Approved Materials List, and shall be installed so as to permit use without entering the manhole. Provisions shall be made for adding an combination air release/ vacuum valve as may be needed in the future.

C. Manholes - Manholes shall be as previously specified in Item 3.06 except as modified herein.

Manholes shall be provided with a removable top slab constructed of Class C reinforced concrete. The top slab shall have 2 inch diameter lifting holes, filled with mastic to prevent the entry of dirt, or approved lifting rings, and a cast iron manhole frame and cover as specified in Item 3.07. Covers shall be solid and shall have the words "SANITARY SEWER" cast in the top.

3.11. WASTEWATER PUMPING STATIONS

A. General

1. Description – All wastewater pumping stations shall be duplex, submersible type stations with a separate wet well and valve vault, panel board, alarms and appurtenances as specified herein.

2. Concrete Work – Concrete and concrete work shall be as previously specified in General Requirements in this Section, and shall include all cast-in-place concrete as required to complete the work.

3. Supports – Provide ODOT Class C concrete piers and beams to support piping entering and piping leaving the wet well and valve vault and within the valve vault. Supports shall include required grout.

This shall also include the furnishing and installation of ASTM A36 structural steel shapes for support of beams, pipes, etc. as shown. All steel supports shall be galvanized after fabrication. All hardware shall be stainless steel.

B. Wet Well – The bottom slab and the top slab shall be of ODOT Class C concrete. Walls shall be constructed of precast reinforced concrete sections having a minimum interior diameter as shown, and meeting the requirements of ASTM C478, except wall thickness shall not be less than 1/12 the I.D. plus 1 inch. Adjoining rings shall be firmly keyed together by means of approved tongue and groove joints with ”O” ring gaskets meeting the requirements of ASTM C443. Provide ODOT Class F concrete fill in the bottom of the wet well.

Walls shall incorporate flexible joints for the influent sewers. Flexible joints shall be as listed in the LCDU Approved Materials List. Flexible joints shall be shock absorbent and shear resistant; shall be designed to prevent any direct contact between the pipe and manhole; and shall provide a tight, infiltration proof sewer connection with the pipe deflected up to 10 degrees in any direction.

Provide a Class 50 ductile iron vent pipe and required wall casting in the top slab. The outlet of the vent shall be provided with a 2 x 2 mesh, 0.063-inch diameter, bronze wire screen mechanically held in

place between two flanges. Vent shall be painted with two coats of epoxy paint in a color selected by the LCDU.

The top slab shall have a floor door as subsequently specified in Paragraph 3.12.D.5.

The top slab shall include an electrical handhole fabricated of aluminum plate and shapes and stainless steel hardware. All aluminum surfaces making contact with concrete or steel shall be painted with bitumastic paint.

C. Valve Vault – The valve vault shall be either a precast or cast-in place rectangular structure. Cast-in place valve vaults shall be ODOT Class C reinforced concrete.

Precast valve vaults shall be of reinforced concrete construction and shall be designed for an AASHTO H-2O traffic load. Concrete and reinforcement shall have a 5,000-psi minimum 28-day compressive strength. Design calculations for the vault shall be submitted to the LCDU for review. The calculations must bear the seal of a professional engineer registered in the State of Ohio.

The top slab shall have a floor door. The floor door shall be as subsequently specified in Paragraph 3.12.D.5, except the upper guide holder, cable holders, and hook are not required.

Provide a vent pipe in top slab as previously specified for the wet well in Paragraph 3.12.B, except that the bronze wire screen shall be 8 x 8 mesh, 0.032 inch diameter.

Provide manhole steps where shown, including those designated as grab bars. Manhole steps shall be of reinforced polypropylene as specified in Paragraph 3.06.E.

Provide a 20A-Duplex, GFCI explosion-proof Receptacle in the valve vault for use for blowers, heaters, etc. Connect to a 20A circuit breaker in the control panel subsequently specified.

D. Pumps

1. Description - Wastewater pumps shall be non-clog, completely submersible, integral pump/motor units designed for handling raw, unscreened sewage, and shall be complete with floor doors and stainless steel pump guides. Pumps shall have a minimum efficiency of 50%. Pumps shall be as listed in The LCDU Approved Materials List.

Metal data plates containing the manufacturer's name, pump size and type, serial number, speed, impeller diameter, capacity and head rating, frame and bearing numbers, and other pertinent data as applicable to the type of pump shall be mechanically attached to each pump.

2. Operating Conditions - The pumps shall be designed for both intermittent and continuous 24 hours per day operation. The motors shall be capable of sustaining a minimum of 10 starts per hour. Specific operating conditions for each pump shall be submitted in the format below to the LCDU for review and approval:

PUMPING STATION	NO. PUMPS	MODEL	PUMP	MOTOR

			Flow (gpm)	TDH (ft)	Eff. (min)	HP	RMP (max)/(nom)

3. Pumps - The design shall be such that the pumps will be automatically connected to the discharge piping when they are lowered into place on a discharge connection, and shall be easily removable for inspection or service, requiring no bolts or nuts to remove, or the need for any personnel to enter into the wet well. Each pump shall be provided with a stainless steel lifting cable or stainless steel lifting chain of adequate strength and sufficient length to permit raising the pump for inspection and removal.

The pump and motor casings and impellers shall be of cast iron. Shafts and all external bolts and nuts shall be of stainless steel. Replaceable wear rings designed for abrasion resistance shall be installed at the inlet of the pump to provide protection against wear to the impeller, or a gray cast iron front plate cutter disc designed to permit tolerance adjustment between the front plate and impeller shall be provided. Impellers shall be of non-clog design, capable of passing solids, fibrous material, and heavy sludge. Solids handling capacity must be acceptable to the LCDU. Bearings shall be prelubricated.

Motor internals shall be separated from pump end by an oil filled chamber with upper and lower mechanical seals. Seals shall require neither routine maintenance nor adjustment, and shall be replaceable.

Units shall have an approved sewage resistant coating.

A sliding guide bracket shall be an integral part of each pumping unit and the pump casing shall have a mating connecting flange to connect with the discharge connection, which shall be bolted to the floor of the sump and so designed as to receive the pump connecting flange without the need of any bolts or nuts. Sealing of the pumping unit to the discharge connection shall be accomplished by a simple linear downward motion of the pump with the entire weight of the pumping unit guided to and pressing tightly against the discharge connection. No portion of the pump shall bear directly on the floor of the sump. No rotary motion of the pump shall be required for sealing.

4. Motors - Motors shall be housed in an air-filled or dielectric oil-filled watertight casing, shall have moisture resistant Class F insulated windings, and shall be NEMA starting code K NEMA Design B. The motors shall be Class I, Division I, Group D rated for explosion proof service. Motors shall have a 1.15 service factor, and shall be for operation on available electric service provided by the utility, as approved by the LCDU. Horsepower ratings shall be as specified in Paragraph 3.12.D.2. Motors shall have voltage tolerances of +10% and -14% of nameplate value and shall have cooling characteristics suitable to permit continuous operation in a totally submerged condition. Each unit shall be complete with sufficient UL approved Type SO four conductor electrical cable to run unspliced from the motor to the junction box as shown on the drawings.

Each motor shall be supplied with two heat sensing units attached to the motor winding which shall trip the starter and provide indication in the event of motor overheat. Pumps shall be provided with seal chambers fitted with an electrode probe and signal box to indicate when water is present in the seal chamber. Heat sensing units and seal chamber probes shall be provided with sufficient cable to run unspliced from the pumping unit to the appropriate point of connection provided herewith.

Motor power cable, motor heat sensing unit cable, and seal chamber cable for each pump shall be bundled together with plastic (nylon) wire ties at 2'-0" intervals over their entire length. Signal conductors may share the same cable as the power conductors or be in separate cables. All cables shall be provided with strain relief at point of entry.

5. Floor Doors and Pump Guides - Floor doors shall be of aluminum construction and shall be complete with upper guide holder, required cable holders, and lifting cable/chain hook. The frame shall be securely anchored in the slab in a location to be determined by the pump manufacturer.

Floor door shall be of the flush type and built to withstand a live load of 150 pounds per square foot. The frame shall be of 1/4 inch extruded aluminum, with built-in neoprene cushion, and shall be provided with anchors. Door leafs shall be 1/4 inch aluminum diamond plate reinforced with aluminum stiffeners as required. Each leaf shall open to 90° and automatically lock with a stainless steel hold open arm with an aluminum or stainless steel release handle. A stainless steel hasp and staple shall be provided for padlocking. Unit shall have a mill finish, with a bituminous coating applied to the exterior of the frame by the manufacturer. Lifting handle, hinges, and all fastening hardware shall be stainless steel. The floor door shall be as listed in The LCDU Approved Materials List.

Each pumping unit shall be complete with required pump guides and mounting hardware for raising and lowering the units. Pump guides shall be stainless steel, and shall extend from the lower guide holders integral with the pump discharge connection to upper guide holders mounted at the access opening. Pump guides over 20 feet in length shall be provided with intermediate stainless steel pump guide brackets. Pump guides shall not support any portion of the weight of the pumps, and shall provide for proper seating alignment.

E. Piping

1. Requirements - Piping includes the following, each with required pipe, fittings, valves, and appurtenances:

a. Wastewater pump ductile iron discharge piping to and including the connection to the force main provided under Paragraph 3.01.C.

b. Valve vault PVC plastic drain piping to the wet well.

Installation of buried piping shall be in accordance with all applicable requirements specified in Division II - Installation.

Unless otherwise specified or shown, all valves 2 inches in diameter and smaller, except check valves, shall be ball valves. All valves 3-inch and larger, except check valves, shall be gate valves.

Connections to equipment shall have unions to facilitate removal.

Dielectric unions shall be provided when joining dissimilar metals.

Pipe, fittings, valves and appurtenances shall conform to the latest edition of the subsequently referenced Standards.

All pipe, fittings, valves and appurtenances shall be appropriately marked for purposes of identification. The materials and methods of manufacture, and the completed pipes, fittings, valves and appurtenances shall be subject to inspection and rejection at all times. The Owner and the LCDU shall have the right to make inspections.

The manufacturer shall furnish an affidavit indicating that the pipe, fittings, valves and appurtenances have been manufactured and tested in accordance with all requirements of the applicable referenced Standards. A copy of the affidavit, indicating the Project on which the material is to be used, shall be forwarded to the LCDU prior to construction.

2. Wall Castings, Sleeves, Etc. - Furnish all wall castings, sleeves, inserts, cored openings, etc. necessary for installation of piping in this Item and as otherwise required. Installation of items embedded in concrete shall be in accordance with the requirements of ODOT Item 604. For new construction, all items shall be in their proper location and elevation before the concrete and piping are placed. Boxing out of forms for later placement will not be permitted. All wall castings and sleeves shall have an intermediate wall collar (waterstop).

For sleeves and cored openings in concrete, the opening between the pipe and sleeve or cored opening shall be sealed using modular mechanical type seals as listed in The LCDU Approved Materials List. Installation shall be in strict accordance with the manufacturer's instructions and shall be such that bolt heads are accessible after installation.

Where piping is to pass through the walls of structures without a wall casting or sleeve, and the opening cannot be sealed using modular mechanical type seals as determined by the LCDU, the openings shall be carefully made at the proper locations, the pipes inserted, and the openings around the pipes neatly and permanently closed with a non-shrink and non-corrosive grout, and an approved caulk.

3. Ductile Iron Pipe and Fittings - Ductile iron pipe and fittings shall be used for pressure pipe in the wet well and valve vault and shall be in accordance with the requirements specified in Paragraph 3.01.C., and the following:

All buried pipe shall have restrained joints.

All exposed pipe shall be of the flanged joint type and shall be Thickness Class 52. Flanged joints shall be in accordance with AWWA C115, with flanges to be of ductile iron. Bolts, nuts and gaskets shall be in accordance with Appendix A of AWWA C115. Bolts and nuts shall be stainless steel minimum grade 304. Bolts shall be of such length that, when nuts are completely tightened, not more than one inch of the bolt,

but at least the length of one full nut, shall be left protruding through the nuts. Flanged joints shall be completely tightened with all bolts taking equal stress.

4. PVC Plastic Pipe and Fittings - PVC plastic pipe and fittings shall be used for valve vault drain piping. PVC plastic pipe and fittings shall be Schedule 80 with solvent cement or threaded joints. The pipe and fittings shall be manufactured from material meeting the requirements of ASTM D1784 for Type 1, Grade 1, Polyvinyl Chloride. Pipe shall conform to the requirements of ASTM D1785. Socket type fittings shall conform to the requirements of ASTM D2467 for Schedule 80. Threaded type fittings shall conform to the requirements of ASTM D2464. PVC plastic piping system shall incorporate provisions for expansion and contraction as recommended by the pipe manufacturer, and required adapters or connectors for joining to pipe, fittings, valves, etc. of other manufacturer.

5. Gate Valves – Gate valves in wastewater pump discharge piping shall be of the resilient seat, rising stem type when possible, meeting AWWA C500 or AWWA C509, constructed of cast iron, bronze mounted and flanged ends. Flanges shall be faced and drilled to ANSI B16.1, Class 125 standard.

Stem seals shall be double O-ring, Buna-N rubber suitable for use with wastewater.

Valve pressure ratings shall be 175 psi for valves through 12 inch in size, and 150 psi for valves larger than 12 inch. Each valve shall be given a hydrostatic and seat test.

Valves less than 6 inch in size shall have handwheel operators.

Valves 6 inch and larger shall be equipped with gear actuators and handwheels. All gearing shall be enclosed in a semi-steel housing and be suitable for running in a lubricant with seals provided on all shafts to prevent entry of dirt and water into the actuator. The actuator shaft and the quadrant shall be supported on permanently lubricated bronze bearings. Actuators shall clearly indicate valve position and an adjustable stop shall be provided to set closing torque and to provide seat adjustment to compensate for change in pressure differential or flow direction change. All exposed nuts, bolts and washers shall be zinc plated.

Gate valves shall be as listed in The LCDU Approved Materials List.

6. Check Valves - Check valves in wastewater pump discharge piping shall be full flow, cast iron body, flanged ends, bronze mounted, full opening swing type, and shall comply with AWWA C508; and, in addition, shall be complete with outside lever and weight, and shall be suitable for installation in either horizontal or vertical position. Valve clapper shall swing completely clear of the waterway when valve is full open, permitting a full flow through the valve equal to the nominal pipe diameter. Valves through 12 inch shall be rated at 175 psi water working pressure, and valves larger than 12 inch shall be rated at 150 psi water working pressure. End connections shall be flanged conforming to ANSI B16.1, Class 125. Cast iron shall conform to ASTM A126, Class B. Clappers shall be all bronze for sizes through 4 inch, and cast iron bronze faced for sizes 6 inch and larger. For valves 14 inch and larger, neoprene rubber facing shall be furnished in place of bronze facing. Hinge pins shall be 18-8 stainless steel with bronze bushing and O-ring seals. Check valves shall be constructed to permit top entry for complete

removal of internal components without removing the valve from the line, and shall be as listed in The LCDU Approved Materials List.

Ball Check valves in valve vault drain piping shall be plastic ball check, and shall be rated for at least 150 psi. Valve shall be constructed of materials for use with PVC plastic pipe, shall be of the double union design which permits removal of the valve without disrupting the existing pipe and shall have socket, threaded or flanged ends. Valves shall be a true union ball check valve as listed in The LCDU Approved Materials List.

7. Ball Valves - Ball valves shall be bronze, two piece body, chrome plated, brass ball, teflon seats and stuffing box ring, with lever handle and balancing stops, solder or threaded ends with union; and shall be as listed in The LCDU Approved Materials List.

8. Pipe Couplings - Pipe couplings for ductile iron pipe shall be of the gasketed sleeve type and shall be of the proper diameter to fit the pipe. Each coupling shall consist of one steel middle ring, two steel followers, two rubber-compound wedge section gaskets and sufficient track-head steel bolts to properly compress the gaskets. Provide tie rods or other positive means of restraint to prevent pipe separation at the coupling. Couplings shall be similar and equal to Dresser Style 38, and shall be as listed in The LCDU Approved Materials List and shall be completely factory finished.

Pipe couplings for PVC piping shall be threaded unions as listed in The LCDU Approved Materials List.

F. Pump Controls

1. Pump Control Panel - The control panel shall include all of the features as described herein and shown on the drawings. All equipment provided herewith shall be heavy-duty type.

a. Control panel shall be designed for operation on available electric service provided by the utility, as approved by the LCDU.

b. Control panel shall be a NEMA 4 weatherproof stainless steel enclosure and shall be dead front, with hinged inside panel to protect electrical equipment. A lock hasp shall be provided on the outside door. Six keys and a lock shall be provided.

c. Non-fusible disconnect or non-automatic circuit breaker with external operating handle for main disconnect of panel main conductors. Handle shall be lockable in the off position.

d. Magnetic trip type circuit breakers for protection of each motor.

e. Thermal magnetic circuit breaker for protection and disconnect of the master control circuit.

f. Provide 20 ampere circuit breakers for each of the following circuits listed:

H1 - Heating strips, lighting fixture and GFI duplex outlet

H2 - Telemetry Equipment

H3 – GFI Duplex outlet in the valve vault.

g. Fused 120 V, 3 KVA minimum, control circuit transformer (fused on all ungrounded legs) for the master control circuit and support of various 120 VAC panel loads. Master control circuit shall provide automatic level control and alternation of pumps.

h. NEMA size magnetic starters with three self-powered electronic overload relays for each pump motor. Provide N.O. auxiliary contact from overload relay for remote alarm monitoring circuits.

i. Alternating relay to automatically alternate the pumps on each successive cycle of operation. Include a three position selector switch to select automatic alternation, #1 pump as lead or #2 pump as lead.

j. Float switch actuated circuit to automatically start lag pump if lead pump cannot keep up with inflow.

k. Seal fail circuits should not halt pump.

l. Time delay relays to prevent simultaneous starting of both pumps. (Although requested to remove these relays to reduce complexity/failures it is recommended that these relays remain to reduce the generator starting requirements.)

m. Panel – mounted pilot lights for the following alarms shall be provided:

1) Pump #1 Windings Overheated
2) Pump # 2 Windings Overheated
3) Water Present in Pump #1 Seal Chamber
4) Water Present in Pump #2 Seal Chamber

n. Provide power failure time delay relay to automatically reset all fail safe circuits following a power outage.

o. Dry contacts shall be provided for the following alarms with each alarm wired to a terminal block for the purpose of remote monitoring:

ALARM CONDITION	FROM PUMP CONTROL PANEL ALARM CIRCUIT
Pump #1 Trouble	OL Aux Contact
Pump #1 (Water in Seal Chamber & Winding Overheat wired in parallel)	Pump #1
Pump #2 Trouble	PL Aux Contact
Pump #2 (Water in Seal Chamber & Winding Overheat wired in parallel)	Pump #2

p. Pump Run Indicator- The pump run indicator shall be an inductive type with relay output. The input shall be after the overloads in the pump output wires.

q. Provide a RTU for monitoring the individual alarms, capable of supporting a minimum of eight individual alarm signals. See Paragraph 3.12.J.

r. Heavy duty, oil-tight type pushbuttons, selector switches, and pilot lights shall be mounted on the inside panel. Pilot lights shall be push-to-test. Each device shall be identified with engraved plastic nameplates fastened with stainless steel screws. "PUMP RUNNING" and red alarm "MOTOR WINDING OVERHEAT", "HIGH WET WELL LEVEL", "LOW WET WELL LEVEL", and "WATER PRESENT IN SEAL CHAMBER".

s. Inside panel mounted elapsed time meter for measuring hours and tenths of hours running time for each pump.

t. Two 250 watt, 120 volt, shielded heating strips (wired in series) connected through an adjustable thermostat to maintain temperature in the panel at 40 to 70°F.

u. Fluorescent fixture with low temperature ballast and 15 watt lamp for interior illumination and a toggle switch for control of the fixture.

v. 20 ampere, 120 volt, duplex outlet mounted inside the panel.

w. Ground lug properly sized for termination of the ground wire.

x. Incoming and outgoing wire and cable shall be connected to a master numbered terminal strip. Every wire leaving or entering a terminal shall have a permanent sleeve type wire marker.

y. All equipment and components within panel shall have a permanently affixed tape on the device or on an adjacent surface which identifies the device.

z. A placard shall be affixed to the inside surface of the access door of the panel. The placard shall display the connection legend and the circuit schematic. The schematic shall identify each wire, junction and termination with respect to corresponding terminals and connections in the panel. Devices and connections associated with, but exterior to, the panel shall be shown in phantom and appropriately identified. The schematic may be a miniature plasticized copy of the connection schematic furnished, if suitable for display.

aa. Shop drawings shall include complete catalog data for each item of equipment used, including all circuit breakers, starters, overloads, pilot lights, selector switches, pushbuttons, floats, light fixtures, receptacles, strip heater, thermostat, and enclosure. Control schematics shall be submitted in ladder logic form for the LCDU's review. A front panel view shall also be submitted, showing all equipment mounted on the panel.

2. Liquid Level Control System - Furnish sealed float type mercury switches to control wet well level and alarm signals. The float switches shall be mercury switches as listed in The LCDU Approved Materials List. Each float switch shall be furnished with an unspliced cable to run from float switch location to the NEMA 7 junction box. Provide the set of floats with an 1/8-inch diameter nylon coated stainless steel cable and ten pound anchor attached to the cable with stainless steel hardware.

The pump manufacturer shall furnish two N.O. spare float switches with the same unspliced cable length as the longest ones installed. The spare float switches shall be delivered to the LCDU.

Float switches shall be mounted at the following elevations:

ELEV "F"
High Level Alarm

ELEV "G"
Lag Pump On

ELEV "H"
Lead Pump On

ELEV "I"
Pumps Off

G. Standby Power – The Contractor or developer shall supply the permanent standby generator in accordance with current Ten States Standards requirements. Permanent standby generators shall be sized to operate all aspects of the pumping station; shall be housed in pump station buildings, as subsequently specified in Section 3.12.H; and shall be submitted to the LCDU for review and approval.

1. Transfer Switch

a. Three-phase monitor is to be used for power fail monitoring; one monitor for primary power and one monitor for emergency or secondary power. (Same as power fail sensor)

H. Building And Appurtenances - For all pumping stations a building adequately sized ventilated and powered, as submitted by the contractor or developer, and as approved by the LCDU, shall be provided to house the permanent standby generator, pump control panel, and appurtenances. In general, the building shall be constructed of insulated brick-on-block walls, gabled wood truss insulated roof, fiberglass shingles, vented soffits, aluminum gutters, and steel doors and it shall be compatible with the surrounding architecture, as approved by the LCDU. All buildings shall be landscaped to blend in with the surrounding properties. A landscape plan shall be submitted for approval by the LCDU. Detailed building design requirements may be obtained through the LCDU.

I. Access Driveway And Fencing – Driveways shall be designed for H-20 loadings to allow heavy truck access. The driveways will be a minimum 12-foot width with a 20-foot radius turnaround. Fencing will be a 6’ high chain link vinyl coated fabric, posts and gates around the perimeter of the pump station. The entrance gate at the access driveway will be a minimum 18-foot wide.

J. Remote Telemetry Unit

1. General - The contractor shall furnish a microprocessor-based, digital Remote Telemetry Unit (RTU). The telemetry system shall be bid as an integrated unit, complete with all required hardware, factory testing, field start-up, system integration, and documentation. The bid for the installation shall include system integration, wiring, materials and programming, both at the site and at the wastewater treatment facility. The telemetry system shall be warranted against defects in materials and workmanship for a period of three years from the date of shipment. The manufacturer of the RTU system shall be as listed in The LCDU Approved Materials List. Bidder Qualification – Bidders must demonstrate experience as a turnkey supplier of multiple address data radio stations. All work shall comply with all applicable codes and regulations.

2. System Description – A remote terminal unit (RTU) shall be located at the remote location to allow standard instrumentation and equipment signals to be directly connected to the systems terminal strip inputs and outputs. The following inputs shall be monitored: Pump Runs, Pump Fails, Generator Run, High Drywell, High Wetwell, Control System Fail, and Power Fail. A variety of display and control devices, as further described in this specification, shall directly interface with the RTU's to provide this data. In addition, communication fail shall be monitored and generated by computer programming. **NOTE:** Pump inputs require a 1200-ohm, ¼ watt resistor in series with the input.

3. RTU Description – The RTU shall be installed at the location specified and shall communicate with the master unit over UHF radio as listed in Radio Description specifications. The R.R.U. will require a modem to interface with the communications radio. All equipment shall be included in the bid to ensure a complete turnkey installation for the vendor.

a. The R.T.U. (for more than two pump stations) provides 20 discrete inputs, 12 relay outputs, 8 analog inputs and two optional analog inputs with three serial ports. For more I/O, simply add Series 5000 I/O modules.

b. These units require 12 VDC. A battery back-up power source, complete with charging network and 12-volt gel cell battery shall be provided. This shall maintain RTU operation for at least 2 hours upon loss of AC power.

4. Radio Description - This system shall be a 450 MHz./952 MHz. multiple address system. The system shall provide a wireless transmission medium for a point to multipoint communications network. Manufacturer shall be as listed in The LCDU Approved Materials List.

a. Frequency modulation (FM) signaling shall be utilized to minimize the effects of electrical interference.

b. Operational characteristics shall comply with the private microwave service part 94 of the FCC rules and regulations. All radio equipment shall be FCC type accepted for the application. Operation on MAS frequencies is intended primarily for continuous poling telemetry. The radio shall be a Dataradio DL-3400 (5 watt) and require a battery back-up power source, complete with charging network and a 12-volt gel cell of AC power. Additional

accessories required for installation of this radio include an interface cable, and an antenna adapter from the radio to the N-style coax connector. Installation shall include all necessary programming.

c. Radio equipment shall operate under environmental conditions of –30 to +60 degrees C. and a relative humidity of 95% non-condensing at 50 degrees C. per EIA 204C.

5. Ancillary Equipment

a. Enclosure – The enclosure (wall mounted) shall be suitable for the conditions of the area where mounted. NEMA 1 should be utilized for general applications and NEMA 4x should be utilized where corrosive fumes or other conditions requiring this rating are present. The enclosure shall have sufficient room to accommodate all necessary equipment and for field terminations of up to 12 AWG. Power shall be 120 VAC, 60 Hz.

3.12. BEDDING AND BACKFILL

A. Bedding – Where bedding is required, sanitary sewers shall be laid on angular granular bedding, equivalent to #46 or #57 limestone, from four inches below the bottom of the pipe in earth or 6 inches below the pipe in rock, placed to a point 30 degrees below the pipe spring-line and shall have a hand-placed, well-compacted granular backfill in maximum six inch (6”) layers to twelve inches (12”) above the top of the pipe. Where bedding is not required, the trench bottom shall be contoured to cradle the pipe along its length with deeper lateral cuts in the trench bottom at each bell to allow the pipe to be supported by the pipe barrel not the bell.

B. Granular Backfill – The granular backfill shall be No. 46 or 57 Limestone.

Trenches within railroad right-of-way, except for longitudinal occupancy, shall be backfilled with crushed stone with a top size of the aggregate to be a maximum of two inches and to have no more than 5% passing the number 200 sieve. The gradation of the material is to be such that a dense stable mass is produced.

C. Control Density Fill (CDF) – Control Density Fill (CDF), where required, shall be ODOT Item 613, Type 1 low strength mortar, except no fly ash or slag permitted. The design mix used shall be approved by the LCDU, and the local authority having jurisdiction over the paved area, shall have a design strength of 100 psi.

II. INSTALLATION

3.13. TRENCHES

A. Gravity Sewers - Except where otherwise specifically required or permitted by the LCDU, sewers shall be laid in open trench, shall be started at the lowest point, and shall have spigot ends pointing in the direction of flow.

Prior to trenching, in lawn areas and in fields used for farming, both as determined by the LCDU, all topsoil shall be removed and stockpiled for replacement during backfilling.

The use of equipment with metal tracks or treads will not be permitted on paved surfaces which will not be removed during trenching operations without some type of pavement protection, such as matting or rubber tracks.

The sanitary sewer pipe or service connection pipe shall be so laid that the barrel will be supported over its full length. Sanitary sewer and service connection pipe shall be laid on a minimum four inches of well compacted bedding material as defined in Item 3.13. The house or service connection sanitary sewer shall be laid such to be centered in a dry trench of minimum width in a straight line of uniform slope. The width of trenches below the level of the top of the pipe shall not exceed the dimensions previously specified for the various types and sizes of pipe, and shall not be less than 12 inches greater in width than the outside diameter of the pipe barrel. Whenever the maximum allowable trench width (below the level of the top of the pipe) is exceeded for any reason, the LCDU reserves the right to direct the Contractor to utilize pipe of greater strength, to modify the type of backfill, to embed the pipe in concrete, or to utilize a combination of these procedures, all at the expense of the Contractor. See Figures 3.14.1 through 3.14.5.

Trenches in earth shall be excavated to a depth of not less than one-quarter the outside diameter of the pipe being installed or 4 inches, whichever is greater, below the outside bottom of the pipe barrel and bell when the pipe is laid on its final grade.

Trenches in rock shall be excavated to a depth of one-third the inside diameter of the pipe, but within the limits of 4 inches to 12 inches, below the outside bottom of the pipe barrel and bell when the pipe is laid on its final grade and the pipe shall then be laid on a cushioning layer of bedding material as specified or as approved by the LCDU and provided by and at the expense of the Contractor. Rock excavation shall be in accordance with the project specifications.

Prior to open trenches entering the paved limits of a street, alley, driveway, sidewalks or parking area, the existing concrete or pavement shall be neatly cut for its full depth, removed, and disposed of off the Project site. Street and road crossings shall be constructed in accordance with the specific requirements of the highway department and specified in Section 1.

Trenches shall be kept free of water during pipe laying and jointing. When water exists in the trenches at the time of pipe laying, the Contractor shall dewater the trench at his expense.

B. Force Mains - Trenches shall be as specified for Gravity Sewers except as modified herein. Force main piping shall be laid on bedding over firm, undisturbed earth shaped to the bottom quadrant of the pipe with bell holes to receive bells or couplings with at least one inch of clearance below the bottom of the bell. Except where otherwise specifically required or permitted by the LCDU, the mains shall be laid in open trench excavated to a depth sufficient to provide not less than 5 feet of vertical cover over the top of the pipe barrel and to provide not less than 4 inches of bedding below the outside bottom of the pipe barrel. However, pipes shall be installed at a greater depth when shown on the drawings; when necessary to pass under other utilities or obstructions; or where necessary to prevent high points in the main. In addition to the minimum vertical cover, where any pipes parallel roadside ditches or streams, a lateral cover shall be provided at least equal to the specified vertical cover.

The width of the trench shall not be more than 24 inches greater than the outside diameter of the pipe, except at joints, where sufficient space shall be provided for properly making the joints without raising the length of pipe above the solid bottom of the trench. Care shall be taken to detect and remove stones and debris in the bottom of the trench which would damage the pipe or be detrimental to the proper bedding of the pipe, with removal to be for a depth of at least 6 inches below the bottom of the pipe and replaced with bedding material.

3.14. PROTECTION OF EXISTING UTILITIES

Existing underground utilities along the route of construction, as shown on the drawings or marked at the time of construction by the utility owner, shall be uncovered by the Contractor and their elevations determined at least 400 feet in advance of pipe installation for gravity sewers and 200 feet in advance for force main piping. Contractor shall contact OUPS 48 hours prior to any excavation work.

All underground utilities, when encountered, shall be adequately supported, shored up or otherwise protected whenever exposed in the excavation. Hardwood supports shall be a minimum of 6 inches square. Supports shall extend into undisturbed earth a minimum of 12 inches each side of the trench and the pipe, conduit, etc., banded or tied to the bridging for its full length. Where bridging cannot be supported by a firm foundation, the Contractor shall provide vertical support for the bridging, including any lateral bracing necessary to provide a firm and substantial support. Supports and bracing shall be of native hardwood and shall be furnished and installed by the Contractor. See Figure 3.15.1.

The drawings shall indicate the location of existing utilities, in accordance with the requirements of the Ohio Revised Code. The LCDU assumes no responsibility for the accuracy of their location or that all existing utilities are shown. A listing of utility company contacts shall be included on the drawings.

Prior to performing any excavation, written or oral notification shall be give to all utilities within the area to be excavated not less than two working days nor more than ten working days in advance of the work. For the LCDU, notification must be in writing. The notice shall include:

1. the name, address, and telephone number of the person filing the notice;
2. the name, address, and telephone number of the person doing the excavation;
3. the anticipated starting date of the excavation;
4. the anticipated duration of the excavation;
5. the types of excavation to be conducted;
6. the location of the proposed excavation; and
7. whether or not explosives will be used.

The excavation work shall be so planned as to avoid damage to and minimize the interference with existing underground utilities in the area. Adequate clearance between the cutting edge of the excavation equipment and the underground utility shall be maintained to avoid damage to the utility.

Above ground (aerial) utilities, including power, telephone and cable television, shall remain in service at all times. Any anticipated disruption of service shall be with the full knowledge of the utility company and required advance notice to the affected users by the Contractor. Removal of guy wires and holding of poles shall be done as required to complete the work, shall be as agreed upon by the utility company and the Contractor, and shall be at the expense of the Contractor.

Arbitrary disruption of underground and aerial utility services will not be permitted.

3.15. TRENCH PROTECTION

Where necessary to prevent caving of the trench and other excavation, and for protection of workmen and nearby structures, trench protection shall be provided per OSHA standards by and at the expense of the Contractor. Trench protection shall be by trench box, wood sheeting and bracing or such other methods as determined by the Contractor. Contractor shall have a competent person on-site to determine the appropriate method for the conditions.

Wood sheeting and bracing shall be of sound lumber suitable for the purpose intended and shall be so arranged as to support the trench walls and existing structures and utilities. When sheeting, the bedding width shall be a minimum of five (5) pipe diameters. Sheeting left in place shall be cut off not less than 18 inches below ground surface.

Sheeting and bracing not noted to be left in place may be removed at the discretion and responsibility of the Contractor after backfill has been placed and compacted to a level at least two feet above the top of the pipe. In no case shall sheeting be pulled in increments exceeding three to four feet in order to avoid the danger of breaking the pipe due to the weight of the backfill. Upon removal of sheeting and bracing, voids left due to such removal shall immediately be filled and the backfill recompacted.

Where it is necessary to drive sheeting below the centerline of the pipe, it shall be driven below the bottom of the pipe as determined by the LCDU, and that sheeting below a point two feet above the top of the pipe shall be left in place.

3.16. PIPE EMBEDMENT

A. General - The bedding material shall be shaped to conform to the bottom quadrant of the pipe barrel. The LCDU reserves the privilege of altering the type of bedding material and regulating the exact grading of the bedding material depending upon the water characteristics of the trench. At least the minimum depth of bedding shall be provided under pipe bells.

After the pipe is laid, the bedding material shall be shovel placed and tamped to fill all voids. The bedding material shall be placed in 6-inch layers, loose measurement, and compacted by hand or mechanical tamping to secure a good compaction. All embedment material shall be carefully placed and tamped so as not to damage or displace the joints or pipe, and no material shall be dropped directly on the pipe. The material shall be compacted to not less than 98% of maximum density as determined in accordance with ASTM D1557 (Modified Proctor).

Damage to existing pipes resulting from the Contractor's operations shall be repaired or replacements made to the satisfaction of the LCDU by and at the expense of the Contractor.

If the material found at the specified depths of excavation below the elevation of the outside bottom of the pipe barrel is not suitable to provide adequate foundation for the pipe, a further depth shall be excavated and filled with granular bedding material approved by the LCDU at the expense of the Contractor.

B. PVC Pipe – Only #57 limestone shall be used for bedding, from a minimum six inches below the pipe for haunching, and for initial backfill to a minimum of 12 inches over the top of pipe.

Bedding, haunching and initial backfill shall be done in accordance with plan notes, details, or as directed by any requirements or standards of the Public Agency having primary jurisdiction. Unless otherwise so stipulated, the final backfill shall be #304 limestone to subbase limits under all pavement, walks, or structures, etc. See Figure 3.17.2.

Verification of compaction, shall be made from tests by a certified, independent testing laboratory at the expense of the installer and at trench distances not to exceed twenty feet (20') apart. All results shall be duly recorded and logged and delivered to the LCDU and the contractor. Compaction shall be a normal requirement of the LCDU, but the Department reserves the right to delete such under mitigating circumstances.

3.17. PIPE LAYING

A. Gravity Sewers - Survey stakes are required for grade every 50 feet (on even stations) and for all tees and manholes locations. Survey stakes shall also be marked with offsets for all sanitary sewers, service connections, tees, and manholes. Pipes shall be laid with their full lengths true to line and grade with the aid of lasers, or other methods approved by the LCDU, and shall rest on the bedding material provided. When laser beam equipment is used, it shall be checked a minimum of twice daily, once in the A.M. and once in the P.M., in the presence of the LCDU to verify that the equipment is maintaining the established line and grade. In addition, when temperature and other atmospheric conditions prevent the laser beam from maintaining grade, the Contractor shall provide additional ventilation through the pipeline by the use of blowers as recommended by the equipment manufacturer or as directed by the LCDU.

Regardless of the method used, the LCDU shall be immediately notified of any misalignment of the pipe when laid in accordance with established cuts or elevations.

Pipes and manholes shall be installed at a minimum 10 foot horizontal distance from water mains, and pipes laid at a minimum 18 inches vertical distance from water mains and other utilities at their crossing, both as measured between the outside of the pipe walls. At crossings, one full length of pipe shall be installed so both joints will be as far from the main as possible. If necessary, existing water mains shall be relocated under proposed sewers.

B. Force Mains - Pipe sections shall be strung along the route of the mains within the right-of-way or easement so as to interfere least with pedestrian and vehicular traffic and to protect the pipe as fully as possible. Care shall be taken at all times in handling the pipe so as not to injure it in any way and at no time shall other pipes or material be placed in the pipes.

The use of equipment with metal tracks or treads will not be permitted on paved surfaces which will not be removed during trenching operations without some type of pavement protection such as matting or rubber tracks. Heavy equipment shall not be driven over streets, but shall be moved by trailer.

The mains shall be laid in the locations and at the grades shown on the drawings, except as specifically permitted or ordered otherwise by the LCDU in order to avoid existing or proposed utility lines or any other obstructions encountered in the progress of the work; to secure a more readily accessible position

for trenching; or to facilitate the location of various appurtenances of the main. Deflection of pipe joints shall be 1/2 of manufacturer's recommendation and in strict accordance with the pipe manufacturer's instructions.

Force main pipe installed shall be provided with a detection/marking tape. The detection tape shall be buried in the trench approximately 18 inches below the ground surface directly above the centerline of the pipe.

When abrupt changes in the grade of the main are necessary to avoid existing utilities or other obstructions, suitable fittings, usually 1/8 bends, shall be used so as to secure an easy flow of liquid and to provide sufficient cover below same unless otherwise specified or noted on the drawings. Care shall be taken to avoid high and low points in the mains.

Pipe shall be laid at a minimum 10 foot horizontal distance from water mains and at a minimum 18 inches vertical distance from water mains at their crossing, both as measured between the outside of the pipe walls. At crossings, one full length of force main pipe shall be installed so both joints will be as far from the water main as possible.

3.18. BACKFILLING

Backfill shall include the material placed above the pipe embedment material previously specified. No heavy or large quantities of backfill material shall be placed over the pipe until backfilling has progressed to a depth of at least 3 feet over the top of the pipe barrel. All backfill material shall be carefully placed so as not to damage the joints or displace the pipe. Backfilling shall immediately follow trenching and pipe laying operations to reduce the possibility of damage to pavements and utilities.

Trenches within existing and proposed stoned streets, alleys, driveways, stoned parking areas and concrete or brick sidewalks shall be backfilled with ODOT 304 limestone. The material shall be placed and compacted to not less than 100% of maximum density as determined in accordance with ASTM D1557 (Modified Proctor). Contractor shall provide Certified Proctor from limestone supplier with the shop drawings, prior to stone being delivered to the Project site.

Where sewers are installed along and across existing and proposed paved or stoned streets, alleys, driveways and parking areas, the specified compacted granular material shall also be provided for backfilling any portion of the trenches falling within that area below a line drawn at 45 degrees to the horizontal from the surface at the edge of the pavement or back of curb and above the horizontal plane of the pipe embedment material.

For trenches within existing or proposed paved streets, alleys, driveways and paved parking areas a controlled density fill (C.D.F.) shall be provided in lieu of the specified granular backfill when directed by the local authority with jurisdiction over the paved area. The mix shall be placed in a usable fluid form and in uniform vertical lifts. Design, finishing and protection of the material shall be recommended by the manufacturer for the application. Quality control test procedures of the manufacturer shall include ASTM C138 - Test for Unit Weight, and ASTM C39 - Test for Compressive Strength. No compaction is required for C.D.F.

Trenches within railroad right-of-way, except for longitudinal occupancy, shall be backfilled with crushed stone. Trenches where sewers are installed longitudinal to the railroad tracks shall be backfilled per railroad requirements, latest revisions. The backfill material shall be placed in loose six inch lifts and compacted to at least 95% of its maximum density with a moisture content that is not more than 1% greater than or 2% less than the optimum moisture as determined in accordance with current ASTM Designation D - 1557 (Modified Proctor). When the backfill material is within three feet of the subgrade elevation (the interface of the ballast and the subsoil), a compaction of at least 98% will be required. Compaction test results confirming compliance must be provided to railroad company's Engineer by the Contractor.

The LCDU may require Contractor to check compaction of the backfill at any time at no cost to Lake County.

Where trenches are backfilled with granular material, the Contractor shall remove excess excavated material. Any excess excavated spoil shall be removed to an approved dumpsite.

In all paved streets and highways, immediately upon completion of other backfilling operations and prior to the end of work for that day, a temporary pavement as specified in Section 1.31 shall be provided and shall remain in place and be properly maintained until such time as the permanent pavements are placed. Permanent pavements shall be placed within two weeks after completion of tests and acceptance of each section of the sanitary sewer, service connection, or force main.

For backfilling the remainder of the trenches, as much of the excavated material as possible shall be replaced until backfilling has progressed to a depth of at least 3 feet over the top of the pipe barrel. The material shall be finely divided free of stones 3 inches or greater in any dimension, boulders, organic materials or other harmful debris, and shall be placed in 6-inch layers, loose measurement, and compacted by mechanical tamping.

Also, immediately upon completion of other backfilling operations and prior to the end of work for that day, a temporary sidewalk shall be provided, and shall remain in place and be properly maintained until such time as the permanent sidewalk is placed. The temporary sidewalk shall consist of a minimum of 1-1/2 inches of the specified compacted granular backfill material placed to the same width as the original sidewalk, and shall be furnished, placed and maintained by and at the expense of the Contractor. The temporary sidewalk shall be reshaped and regraded prior to the installation of permanent sidewalk.

After backfilling, along weed or unsodded areas the material shall be graded to conform to the original ground profile. In lawn areas and in fields used for farming, all topsoil removed and stockpiled prior to trenching shall be replaced and graded to conform to the original ground profile. In lawns and other areas where grass exists, as determined by the Owner or the LCDU, the area shall be graded and made ready for seeding as specified in Section 1.29. In lawn areas, if the existing replaced topsoil does not provide the required 4-inch minimum depth as specified in Section 1.29, the Contractor shall provide additional topsoil at his expense.

The Contractor shall be required to regrade and reshape all road shoulders and all ditches or swales from existing high points to existing drainage structures or other outlets along the proposed

improvement. The Contractor and the LCDU shall mutually agree and establish all ditch grades to be restored prior to construction. Ditches, which are reshaped, shall have reasonable side slopes. Vertical or steep slopes will not be permitted.

3.19. CONNECTIONS TO STRUCTURES AND PIPES

When required, new and existing sewers shall be connected to structures through stubs, wall castings, wall sleeves, etc. provided for same; or an opening shall be made at the proper elevation in the wall of the structure, the pipe inserted and the opening around the pipe neatly and permanently closed with a non-shrinking and non-corrosive grout. Grout shall be a non-metallic, non-shrink, pre-mixed compound capable of developing minimum compressive strength of 5,000 psi in 28 days. All connections shall be watertight. Where necessary, the bottoms of existing structures shall be reshaped to give a smooth flow in all directions.

Connections to unlike types and sizes of pipe shall be accomplished using the proper adapter and/or connector.

3.20. ROCK EXCAVATION.

A. General - The term "rock excavation" shall include the removal of such material as cannot be broken and removed by ordinary excavating equipment. The definition of ordinary excavating equipment does not include rippers or power operated jackhammers. Disintegrated, weathered, rotten and loose rock particles capable of removal by ordinary methods are not included within the scope of rock excavation.

B. Excavation - Excavation shall be carried to a sufficient depth to provide for a cushioning layer of bedding material as previously specified in Item 3.17. Width of trench shall be not more than previously specified for the respective type of pipe.

Excavation for structures shall extend to a plane 4 inches below the underside of the concrete foundations and be confined to limits two feet beyond the outside of such foundations.

C. Disposal Of Rock - Except under special permission from the LCDU, rock removed by excavation shall not be used for backfill, but shall be disposed of by the Contractor off the Project site. Necessary bedding and backfill for trenches and other excavations in rock excavation shall be approved by the LCDU.

D. Damage To Existing Facilities - The Contractor shall be responsible for all damage to existing structures, piping, sewers, drains, cables, conduits, equipment and appurtenances resulting from his rock excavation operations, and shall repair same to the satisfaction of the Owner and the LCDU.

3.21. SERVICE CONNECTIONS

A. Provide for existing and future houses and businesses; 6 inches in diameter, unless otherwise shown.

B. Locations and depths, where shown, are approximate only. Final locations and depths will be established by the LCDU at time of construction.

C. Connect to the main sewer by providing an appropriate tee.

D. Where to be installed to the property line, install the pipe true to line and on at least 1 percent grade with a minimum depth of 8 feet at the property line or the maximum depth possible for main sewers less than 8 feet deep.

E. Install in open cut, except where otherwise required or permitted by the LCDU.

1. Where installed by free boring, extend hole 5 feet each side of pavement, thread pipe into hole from boring pit with leading end of first pipe covered to prevent damage and the entry of earth, and fill space around pipe with grout.

2. Where installed within steel encasement pipe, size encasement pipe for at least 6-inch clearance around pipe bell, with minimum wall thickness to be 0.375 inch; follow Section 3.05.

F. Riser sections of pipe and fittings are acceptable between the main line sewer connection and that portion installed on at least a 1 percent grade where depths to the main sewer invert exceed 12 feet. Fix riser in place for its full height by providing thoroughly tamped pipe embedment material as specified in Section 3.10.

G. Close service connections not immediately connected to an existing sewer with a stopper. Stoppers shall be specifically designed for use with the pipe, shall be for use as a permanent or temporary plug, shall be watertight, and shall be removable without damaging the pipe.

H. Do not backfill the ends of service connections until the location is referenced in accordance with the detail on the Drawings. Provide a 2-inch square oak pole accurately placed over the terminus of each service connection and extending vertically to flush with the surface of the ground so that it can be located.

I. When an unused sanitary sewer lateral remains on a buildable lot after building demolition, the lateral will be plugged at the right-of-way line and marked with a wye pole. When a sanitary sewer lateral connection is to be permanently abandoned, it will be disconnected and plugged at the main.

3.22. PUMPING STATION INSTALLATION

A. Sitework Description – The materials and methods of construction for sitework shall meet the requirements of the latest edition of the Items of the Ohio Department of Transportation (ODOT) “Construction and Material Specifications” as subsequently specified herein.

B. Earthwork – Earthwork shall be in accordance with all applicable requirements of ODOT Item 201 and ODOT Item 203, and the following, and shall include that required for site preparation incidental to construction, and for filling and grading.

Clearing and grubbing shall include the removal and repair of trees in accordance with the requirements of Section 1.20. Topsoil shall be removed from areas of construction and areas to be filled and graded, and stockpiled, with a minimum of 4 inches of topsoil to be replaced in earth areas during filling and grading.

All materials and debris from clearing and grubbing, and all excess and unsuitable excavated materials shall be disposed of by the Contractor in accordance with the requirements of Section 1.25.

All earth areas shall be seeded in accordance with the requirements Section 1.29.

C. Influent Sewer – This shall include the materials and construction of the pumping station influent sewer in accordance with the requirements previously specified in Division I for Pipe Sewers.

D. Excavation And Backfill – The Contractor shall excavate material of any nature encountered. Excavated material, if acceptable to the LCDU, shall be used for filling and grading of the pumping station site, and all excess shall be disposed of in accordance with the requirements of Section 1.25.

Excavation shall be carried at least to the outside dimensions and to the depth shown on the drawings and within limits of vertical planes passing 24 inches outside of the outer limits of the structures. All excavation below the depth shown, unless so ordered by the LCDU, shall be filled with ODOT Class F concrete at the expense of the Contractor.

All sheeting, shoring, bracing, etc., required for the protection of workers and to complete the excavation shall be provided at the expense of the Contractor. The LCDU has the right to require the use of sheeting to protect public or private infrastructure or structures. The type of sheeting used, design, and method of installation, including embedment and bracing, shall be determined by the Contractor. Wood sheeting and bracing shall be as specified in Item 3.16.

Backfill around the wet well and valve vault shall be ODOT Item 304 crushed limestone mechanically tamped in 6-inch layers, loose measurement, to not less than 98% of maximum density as determined in accordance with ASTM D1557 (Modified Proctor). As a minimum, the top 4 inches in earth areas shall be topsoil.

Backfilling shall include the 6-inch thick stone leveling course beneath the valve vault for pre-cast vaults only.

III. TESTING

3.23. TESTING FOR DEFLECTION (GRAVITY SEWERS)

All sanitary sewers of PVC plastic pipe shall be tested for a maximum deflection of 5% of the pipe average inside diameter not less than 30 days after final full backfill has been placed, as determined by the LCDU.

Such tests shall be conducted with a representative of the LCDU present. All pipes exceeding a deflection of 5% of the average inside diameter shall be replaced and then retested until satisfactory test results are obtained. No “rerounding” of the pipe shall be permitted or accepted under any circumstances at any time. The Contractor shall pay all costs for the tests. Test results shall be submitted to the appropriate Ohio Environmental Protection Agency (OEPA) District Office.

The tests shall be conducted using electronic equipment specifically designed for measuring and recording deflection in flexible pipe or by the use of an approved deflection probe (mandrel), having a diameter equal to 95% of the average inside diameter of the pipe being tested, pulled through the sewer

line. If the deflection probe is used, test shall be performed without mechanical pulling devices, and a proving ring, having an I.D. equal to the O.D. of the probe, shall be available at the time the probe is used to verify that the probe has the proper diameter by inserting the probe into the ring.

The deflection probe shall be certified by an independent testing laboratory, and shall be designed specifically for testing the deflection of the type and size of pipe subject to test. The probe shall incorporate an odd number (no less than 9) of 1/2" x 3/16" bar stock runners equally spaced on edge around and welded to the circumference of two minimum 1/4 inch thick circular steel plates. The diameter of the probe for the type and nominal size of the pipe to be tested shall be equal to 95% of the average inside diameter of the respective pipe as specifically given or determined by the LCDU from information given in the appropriate ASTM Standard for the pipe.

The distance between plates, out-to-out, shall not be less than 2 inches smaller than the nominal diameter of the pipe to be tested. The runners shall extend approximately 1-1/2 inches beyond each plate, being bent inward for this distance at approximately 30°. A continuous 3/4 inch threaded rod shall be provided through the center of the plates, having a hex nut drawn tight against the inside face of each plate, and extending each side as required for providing a 3/4 inch ferrule loop insert or similar piece for attaching the pulling medium.

3.24. TESTING FOR LEAKAGE (GRAVITY SEWERS)

A. General - The Contractor shall include labor and materials, including any water and all equipment, necessary to complete the leakage tests specified herein. Such tests shall be conducted before testing for deflection is complete, where applicable, and with a representative of the LCDU present, and his judgment shall be final as to the acceptance of all tests. Leakage tests shall be conducted on the entire length of the Project, including manholes. Test results shall be submitted to the appropriate OEPA District Office.

Also, prior to conducting leakage tests, the Contractor shall make a determination of ground water level by installing ground water gauges.

In all cases, for any test section failing to meet the limits of the specifications, the Contractor shall be required to locate and remedy the defects causing the failure and the section shall be retested and repairs or replacement continued until the limits of the specifications are satisfied. For sewers not accessible, should a test fail due to other than a leaking plug, a closed circuit television inspection of the test section shall be conducted to determine the cause of the failure. The television inspection shall be in accordance with all applicable "Recommended Specifications for Sewer Collection System Rehabilitation" of The National Association of Sewer Service Companies and as approved by the LCDU. The television inspection shall be recorded to a DVD in mpeg format as directed by the LCDU. The LCDU shall retain video recording of all television inspections. The Contractor shall pay all costs for inspection.

As a demonstration of workmanship and the materials proposed to be used, the Contractor shall test the first section before proceeding with construction further than four sections. After the first section passes the test, construction may resume. The testing operation shall be continuous throughout the

construction of the projects and at no time during construction shall there be more than four (4) sections not tested.

It is understood that each section, as above described, must be tested and determined by the LCDU to conform to the specifications before such section or sections are included in any current or final estimate for payment to the Contractor. It is further understood that, if the leakage does not come within the limits specified, the Contractor will be required to do such work as may be necessary in order to insure conformance even to the extent of reconstructing the defective section or sections.

All visible leakage in sewers and manholes shall be repaired, even though tests may have been satisfactory.

All plugs used during leakage tests shall be of a length at least equal to the diameter of the pipe being tested to assure a watertight seal.

In the event a sanitary sewer does not pass a leakage test and a repair on the new line must be made, the following are the acceptable methods of repairing the sanitary sewer:

Replace the sewer line from manhole to manhole

Cut out the leaking joint and replace it with like pipe and approved couplings

Line the pipe with an approved liner, from manhole to manhole.

B. Exfiltration Tests – When testing multiple sections, the maximum allowable leakage will be equal to the allowable leakage for the shortest section manhole to manhole. No test shall exceed 900 feet including lateral lengths. The inlets of the upstream and downstream manholes shall be closed with watertight plugs and the test section filled with water until the elevation of the water in the upstream manhole is three feet above the crown of the pipe in the line being tested, three feet above the existing ground water in the trench, whichever is higher. A standpipe may be used instead of the upstream manhole for providing the pressure head when approved by the LCDU. Exfiltration shall be measured by determining the amount of water required to maintain the initial water elevation for one hour from the start of the test. The entire length of section to be tested shall be filled and maintained full of water for a period of approximately 24 hours prior to the start of the test to allow for saturation of the pipe. The maximum allowable leakage, including manholes, shall be 100 gallons per inch of diameter per mile of pipe per day.

For service connections, the maximum allowable leakage shall be 100 gallons per inch of diameter per mile of pipe per day with a minimum height of water of two feet above the highest pipe.

3.25. PRESSURE AND LEAKAGE TEST (FORCE MAINS)

The main shall be subjected to a pressure and leakage test in accordance with AWWA C600-93 and the following:

The main shall be isolated and pressure shall be applied by pumping water into the main. The test pressure shall be 150 pounds per square inch (psi), unless valves in the existing mains are involved within section of new main being tested, in which case the test pressure shall be 100 psi; and shall not vary by more than ±5 psi.

The pressure test shall be started in an afternoon and the pressure shall be on for 2 hours, and then, the test pressure shall be maintained for an additional two hours by pumping water into the main. At the end of the two hour period, the water used shall be measured and the loss by leakage shall not exceed that as determined by the following formula:

$$L = \frac{SD\sqrt{P}}{133,200}$$

in which L is the allowable leakage in gallons per hour; S is the length of pipe tested in feet; D is the nominal diameter of the pipe in inches; and P is the average test pressure during the leakage test in pounds per square inch gauge.

When testing against closed metal-seated valves, an additional leakage per closed valve of 0.0078 gal/hr./in. of nominal valve size shall be allowed.

If the main does not pass the leakage test, the leak or leaks shall be located and repaired and the testing procedure repeated by and at the expense of the Contractor. All visible leaks shall be repaired regardless of the amount of leakage.

Pressure and leakage testing is a responsibility of the Contractor, who shall provide all materials, labor and equipment and, in addition, pay for the total volume of water used.

3.26. TESTING FOR PUMPING STATIONS

A. Wastewater Pumps Testing - The pump manufacturer shall perform the following tests on each pump before shipment from the factory:

1. A motor and cable insulation test for moisture content and insulation defects shall be made.
2. Prior to submergence, the pump shall be run dry and checked for correct rotation and mechanical integrity.
3. Pump shall be run for 30 minutes in a submerged condition, minimum six feet under water.
4. After operational test 3), insulation test 1) shall be performed again.
5. A written certified test report giving the above information shall be supplied with each pump at the time of shipment.

Also, each pump of 500 gpm and larger shall be subjected to a witnessed certified Hydraulic Institute performance test as follows, while pumps less than 500 gpm shall be subjected to a non-witnessed certified Hydraulic Institute performance test as follows:

1. The pump shall be tested at the design point as well as at least seven other points to develop a curve. Data shall be collected to plot the head-capacity curve as well as a KW input and amperage curve.
2. In making the tests, no minus tolerance or margin shall be allowed with respect to capacity, total head, or efficiency at the specified design

condition. Pump shall be held within a tolerance of +10% of rated capacity or at rated capacity with a tolerance of +5% of rated head. The pump shall be tested at shut-off but shall not be plotted and only used as a reference point when plotting the performance curve.

3. Complete records shall be kept of all information relevant to the test as well as the manufacturer's serial number, type and size of pump, and any impeller modifications made to meet the design conditions.

4. A written test report shall be prepared, signed and dated by the test engineer incorporating three curves (head-capacity, KW input, and amperage) along with the pump serial number, test number, date, speed, volts, phase, and impeller diameter, and the report submitted to the Engineer.

After testing, all ends of pump cables shall be sealed with a high quality protective covering to make them impervious to moisture or water seepage prior to electrical installation.

B. Pump Draw-Down Test – Contractor shall perform an on-site drawdown test to test the pumps in the specified operating range using portable vaults. This test shall be performed in the presence of the LCDU, after installation of the pumps and prior to start-up.

C. Pressure And Leakage Tests – Upon completion of pipe installation, pressure and leakage tests shall be applied to all piping. Wastewater pump discharge piping pressure and leakage testing shall be in accordance with the requirements specified in Item 3.26. Valve vault drain piping shall be demonstrated free to drain.

The Contractor shall provide all labor and equipment required for pressure and leakage testing, and, in addition, pay for the total volume of water used.

Upon the successful completion of testing, all piping shall be flushed and cleaned. Flushing shall be done in such a manner that no obstruction shall be lodged under valve seats, and all valve seats shall be left in perfect condition.

3.27. TELEVISION INSPECTION

Upon completion of leakage testing, all new main line gravity sewers shall be inspected by television. The television inspection shall be in accordance with all applicable Pipeline Assessment Certification Program (PACP) of The National Association of Sewer Service Companies protocol and as approved by LCDU.. The LCDU shall view the monitor at all times, and shall approve picture quality and definition. Upon approval by LCDU, television inspection of sewers may be implemented by a third party contractor.

The video equipment for testing shall record to a DVD in mpeg format at a minimum of 600-line resolution color video picture and include two audio tracks, and as directed by the LCDU. A mobile studio for above ground control and adjustment of equipment and viewing the monitor shall be used, and shall accommodate a minimum of four people. The camera shall be designed specifically for such inspections,

shall be operative in 100% humidity conditions, shall have lighting suitable to allow a clear picture for entire pipe periphery, and shall have metering device so location of camera at point of observation is known at all times.

During closed-circuit television inspection, location of leakage, damage, obstructions, or other faults discovered and service connections shall be referenced from a structure or terminus and appear on the tape and in the report.

During video inspection, any leakage, damages or other faults discovered shall be corrected to the satisfaction of the LCDU. After completion of repair work or subsequent cleaning of the sewers, the sewers shall be subject to the closed-circuit television inspection again to document the repairs and/or corrective measures taken, and that these corrective measures have achieved the results desired. All subsequent inspections shall be at the Contractor's cost.

The Contractor installing the sewers shall provide one set of video recordings for each inspection attempt and one copy of the report to the LCDU. The report shall include the results of the video inspection and actions taken to correct leakage, damage and other faults discovered and removal of any obstructions.

3.28. COMPLETION OF TESTS

When the tests on the main or sanitary sewer have been successfully completed, the line shall be jet-flushed and cleaned, with a LCDU representative present, at the Contractor's expense before it is televised and; if appropriate, accepted.

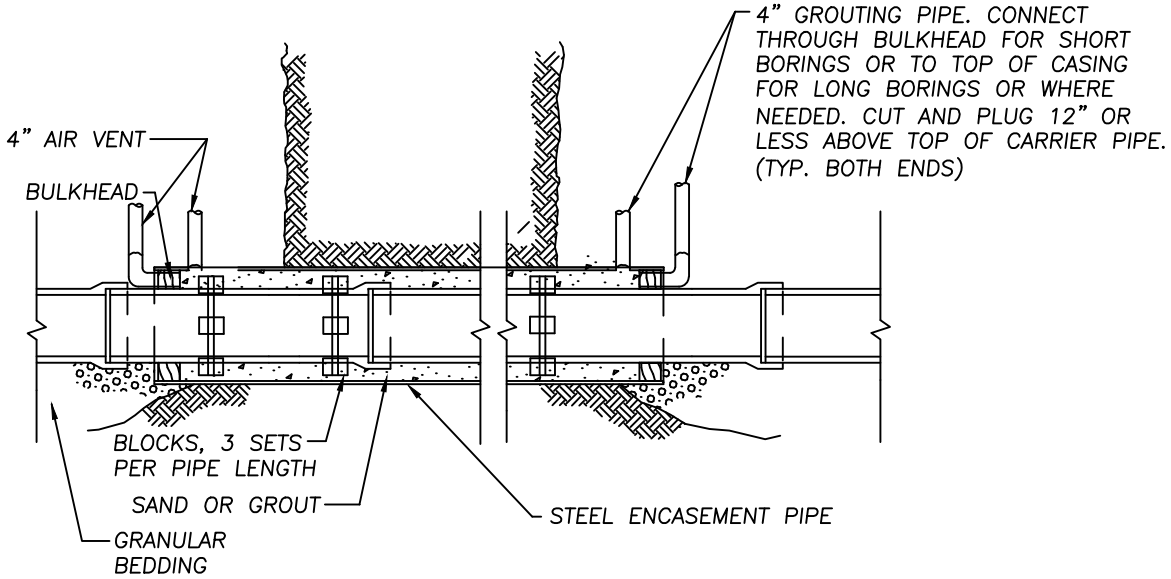

NOTES:

1. WELD ALL ENCASEMENT PIPE JOINTS.
2. MINIMUM THICKNESS FOR NEW CASING PIPE IS 1/2–INCHES.
3. BLOW SAND OR POUR GROUT FROM ONE END ONLY.
4. CASING DIAMETER SHALL BE A MINIMUM OF 6" GREATER THAN THE LARGEST O.D. OF THE CARRIER PIPE.
5. CARRIER PIPE MUST BE CLASS 52 D.I.P. MINIMUM OR AS SPECIFIED.
6. ALL MATERIALS SHALL BE AS LISTED ON THE LCDU APPROVED MATERIAL LIST.
7. PIPE RESTRAINT REQUIRED.

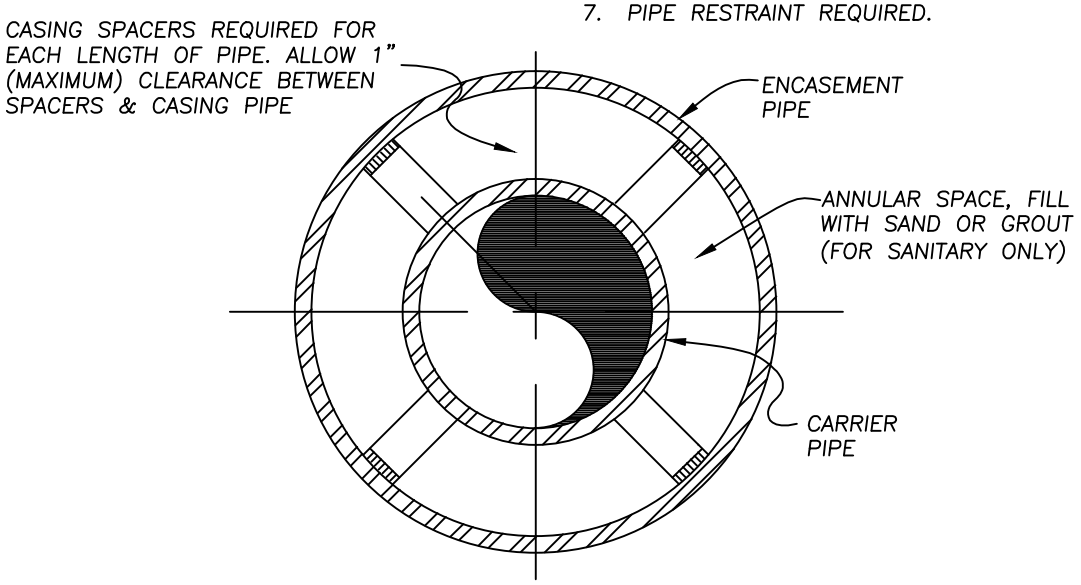

SECTION

SANITARY ONLY FIG 3.5.1

LAKE COUNTY DEPARTMENT OF UTILITIES		
BORING AND STEEL ENCASEMENT PIPE DETAILS		
DATE: 09–17	DRAWN BY: DDB	SCALE: NONE

ALL PRECAST CONCRETE SHALL BE REINFORCED IN ACCORDANCE WITH THE LATEST REVISIONS OF A.S.T.M. DESIGNATION C-478. ALL PRECAST CONCRETE SECTIONS SHALL BE MANUFACTURED AND FURNISHED AS SOLID SECTIONS WITHOUT LIFT HOLES OF ANY KIND.

NOTES:

1. MANHOLES SHALL BE PERFECTLY PLUMB.
2. THOROSEAL INSIDE OF SANITARY MANHOLES ONLY, FULL DEPTH (ANY COLOR BUT GRAY). ALL JOINTS AND CONNECTIONS TO BE WATER PLUGGED.
3. ALL MATERIALS TO BE AS LISTED ON THE LCDU APPROVED MATERIALS LIST.
4. ALL MANHOLES SHALL HAVE EXTERNAL CHIMNEY SEALS.

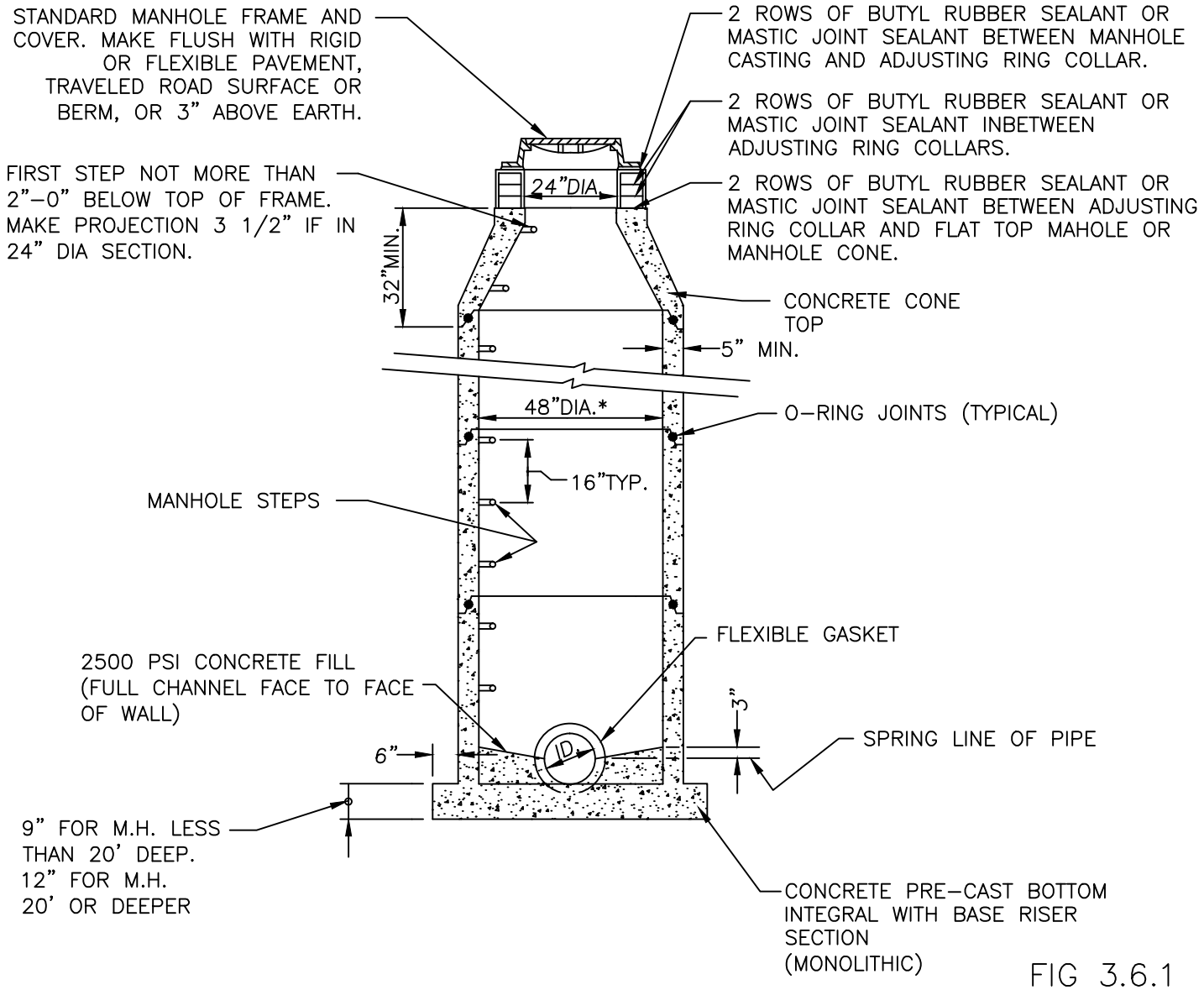

FIG 3.6.1

* INSIDE DIAMETER = 48" FOR PIPE DIAMETER 24" AND LESS.

LAKE COUNTY DEPARTMENT OF UTILITIES		
TYPE "A" CONCENTRIC MANHOLE DETAIL		
DATE: 9-17	DRAWN BY: DDB	SCALE: NONE

ALL PRECAST CONCRETE SHALL BE REINFORCED IN ACCORDANCE WITH THE LATEST REVISIONS OF A.S.T.M. DESIGNATION C–478. ALL PRECAST CONCRETE SECTIONS SHALL BE MANUFACTURED AND FURNISHED AS SOLID SECTIONS WITHOUT LIFT HOLES OF ANY KIND.

NOTES:

1. MANHOLES SHALL BE PERFECTLY PLUMB.
2. THOROSEAL INSIDE OF SANITARY MANHOLES ONLY, FULL DEPTH (ANY COLOR BUT GRAY).
3. ALL JOINTS AND CONNECTIONS TO BE WATER PLUGGED.
4. ALL MATERIALS SHALL BE AS LISTED ON THE LCDU APPROVED MATERIAL LIST.
5. THE MANHOLES SHALL HAVE EXTERNAL CHIMNEY SEALS.

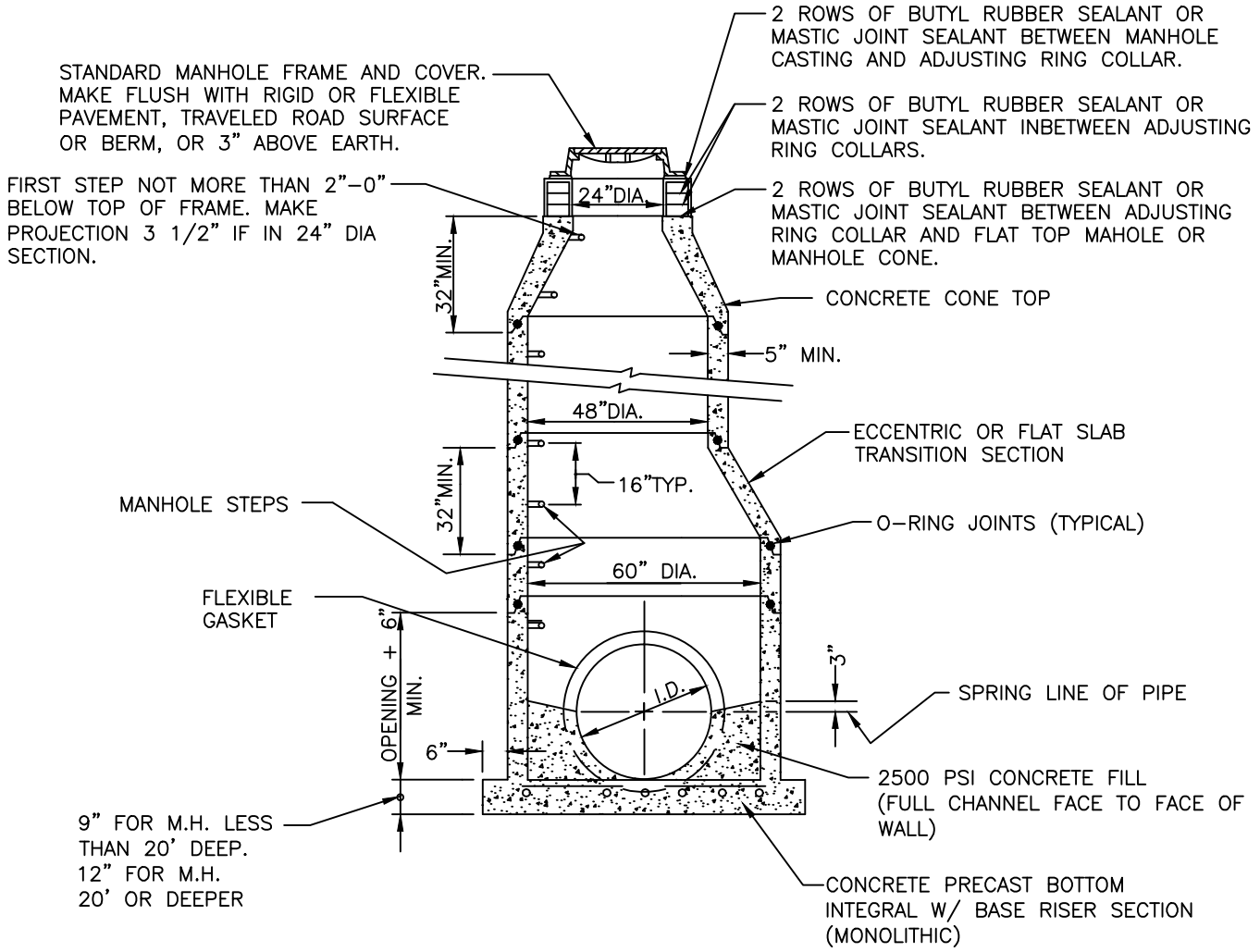

FIG 3.6.2

LAKE COUNTY DEPARTMENT OF UTILITIES		
TYPE "B" CONCENTRIC MANHOLE DETAIL		
DATE: 9–17	DRAWN BY: DDB	SCALE: NONE

ALL PRECAST CONCRETE SHALL BE REINFORCED IN ACCORDANCE WITH THE LATEST REVISIONS OF A.S.T.M. DESIGNATION C-478. ALL PRECAST CONCRETE SECTIONS SHALL BE MANUFACTURED AND FURNISHED AS SOLID SECTIONS WITHOUT LIFT HOLES OF ANY KIND.

NOTES:

1. MANHOLES SHALL BE PERFECTLY PLUMB.
2. THOROSEAL INSIDE OF SANITARY MANHOLES ONLY, FULL DEPTH (ANY COLOR BUT GRAY).
3. ALL JOINTS AND CONNECTIONS TO BE WATER PLUGGED.
4. ALL MATERIALS SHALL BE AS LISTED IN THE LCDU APPROVED MATERIAL LIST.
5. ALL MANHOLES SHALL HAVE EXTERNAL CHIMNEY SEALS.

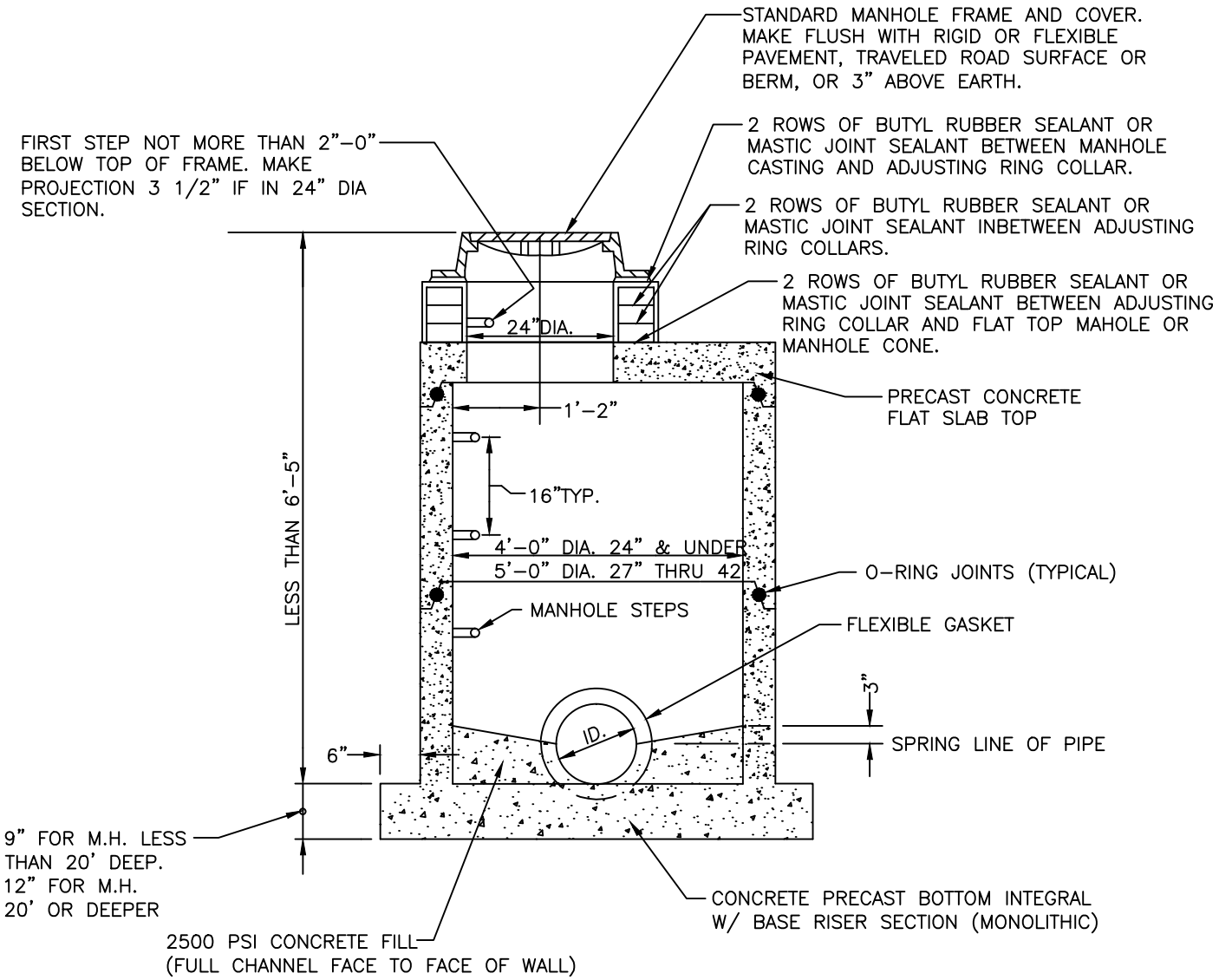

FIG 3.6.3

LAKE COUNTY DEPARTMENT OF UTILITIES		
SHALLOW PRECAST MANHOLE DETAIL		
DATE: 9-17	DRAWN BY: DDB	SCALE: NONE

ALL PRECAST CONCRETE SHALL BE REINFORCED IN ACCORDANCE WITH THE LATEST REVISIONS OF A.S.T.M. DESIGNATION C-478. ALL PRECAST CONCRETE SECTIONS SHALL BE MANUFACTURED AND FURNISHED AS SOLID SECTIONS WITHOUT LIFT HOLES OF ANY KIND.

NOTES:

1. MANHOLES SHALL BE PERFECTLY PLUMB.
2. THOROSEAL INSIDE OF SANITARY MANHOLES ONLY, FULL DEPTH (ANY COLOR BUT GRAY).
3. ALL JOINTS AND CONNECTIONS TO BE WATER PLUGGED.
4. ALL MATERIALS TO BE AS LISTED ON THE LCDU APPROVED MATERIAL LIST.
5. ALL MANHOLES SHALL HAVE EXTERNAL CHIMNEY SEALS.

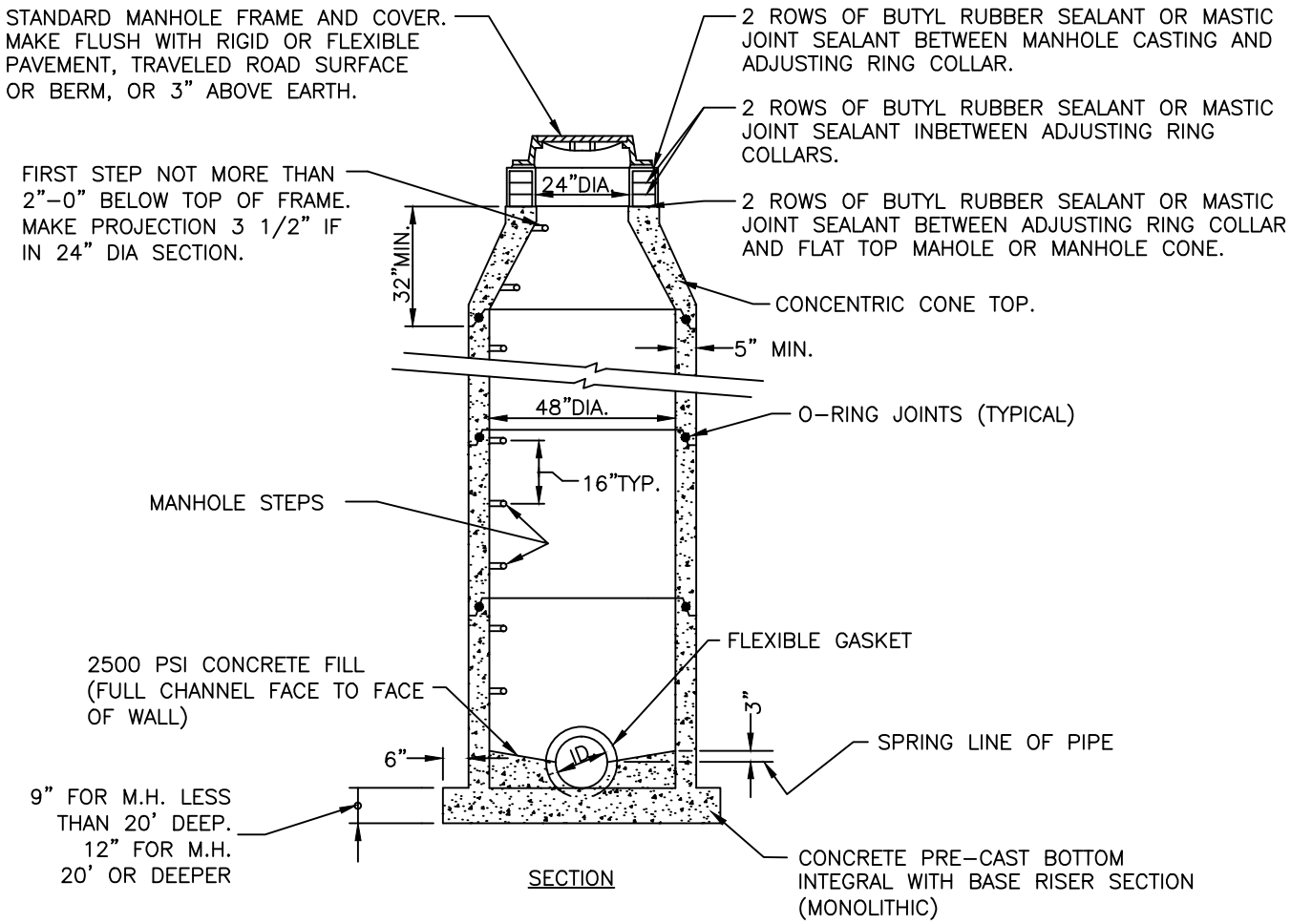

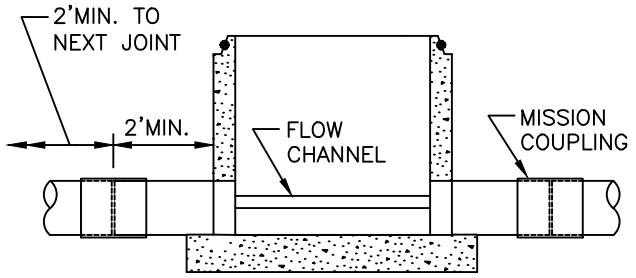

CUT-IN DETAIL

FIG 3.6.4

LAKE COUNTY DEPARTMENT OF UTILITIES		
CUT-IN MANHOLE DETAIL		
DATE: 9-17	DRAWN BY: DDB	SCALE: NONE

NOTES:

1. MANHOLES SHALL BE PERFECTLY PLUMB.
2. THOROSEAL INSIDE OF MANHOLES FULL DEPTH (ANY COLOR BUT GRAY).
3. ALL JOINTS AND CONNECTIONS TO BE WATER PLUGGED.
4. ALL MATERIAL SHALL BE AS LISTED IN THE LCDU APPROVED MATERIAL LIST.

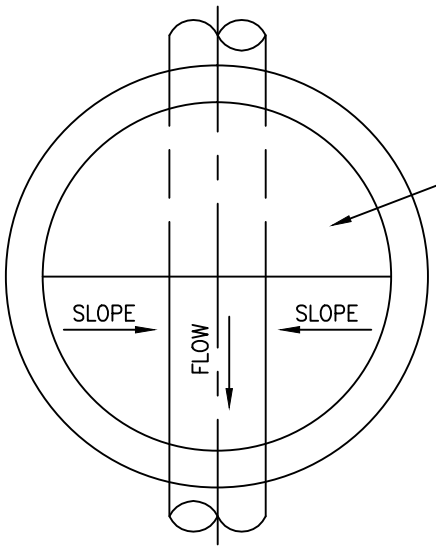

CONCRETE PLATFORM (INLET SIDE OF MANHOLE)

ALL PRECAST CONCRETE SHALL BE REINFORCED IN ACCORDANCE WITH THE LATEST REVISIONS OF A.S.T.M. DESIGNATION C-478. ALL PRECAST CONCRETE SECTIONS SHALL BE MANUFACTURED AND FURNISHED AS SOLID SECTIONS WITHOUT LIFT HOLES OF ANY KIND.

PLAN VIEW

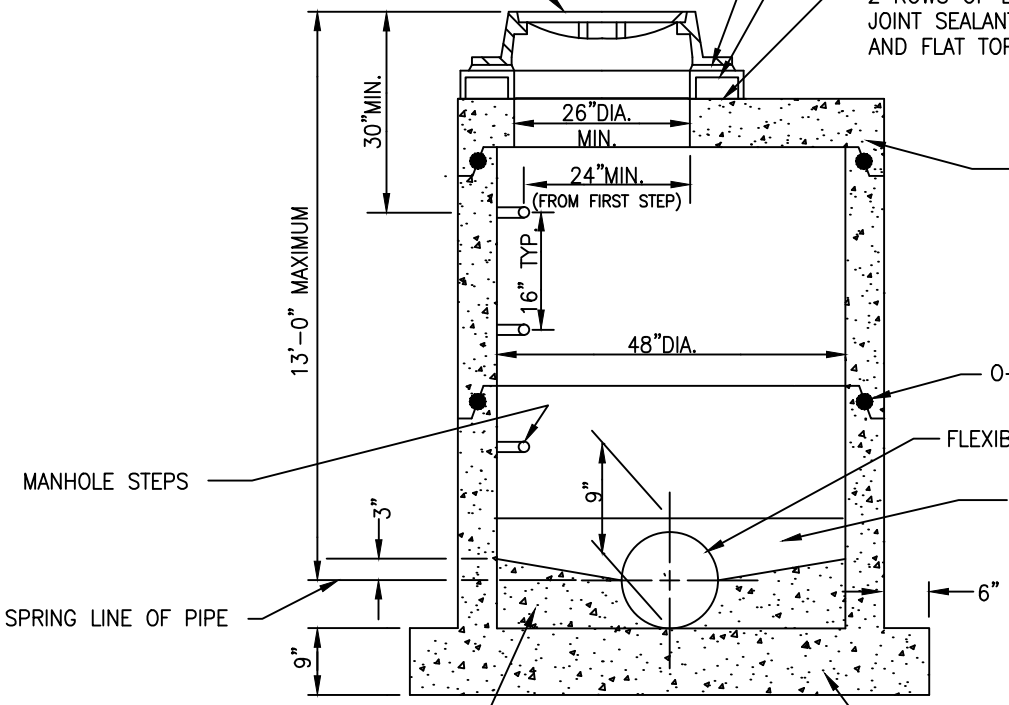

2 ROWS OF BUTYL RUBBER SEALANT OR MASTIC JOINT SEALANT BETWEEN MANHOLE CASTING AND ADJUSTING RING COLLAR.

STANDARD MANHOLE FRAME AND COVER. MAKE FLUSH WITH RIDGED OR FLEXIBLE PAVEMENT, TRAVELED ROAD SURFACE OR BERM, OR 3" ABOVE EARTH.

2 ROWS OF BUTYL RUBBER SEALANT OR MASTIC JOINT SEALANT INBETWEEN ADJUSTING RING COLLARS.

2 ROWS OF BUTYL RUBBER SEALANT OR MASTIC JOINT SEALANT BETWEEN ADJUSTING RING COLLAR AND FLAT TOP MAHOLE OR MANHOLE CONE.

PRECAST CONCRETE FLAT SLAB TOP

O-RING JOINTS (TYPICAL)

FLEXIBLE GASKET

MANHOLE STEPS

3,000 P.S.I CONCRETE PLATFORM (SEE PLAN VIEW)

SPRING LINE OF PIPE

2500 PSI CONCRETE FILL (FULL CHANNEL FACE TO FACE OF WALL)

SECTION VIEW

CONCRETE PRECAST BOTTOM INTEGRAL WITH BASE RISER SECTION (MONOLITHIC)

FIG. 3.6.5

LAKE COUNTY DEPARTMENT OF UTILITIES		
SAMPLING AND METERING MANHOLE		
DATE: 3-14	DRAWN BY: D.D.B.	SCALE: NONE

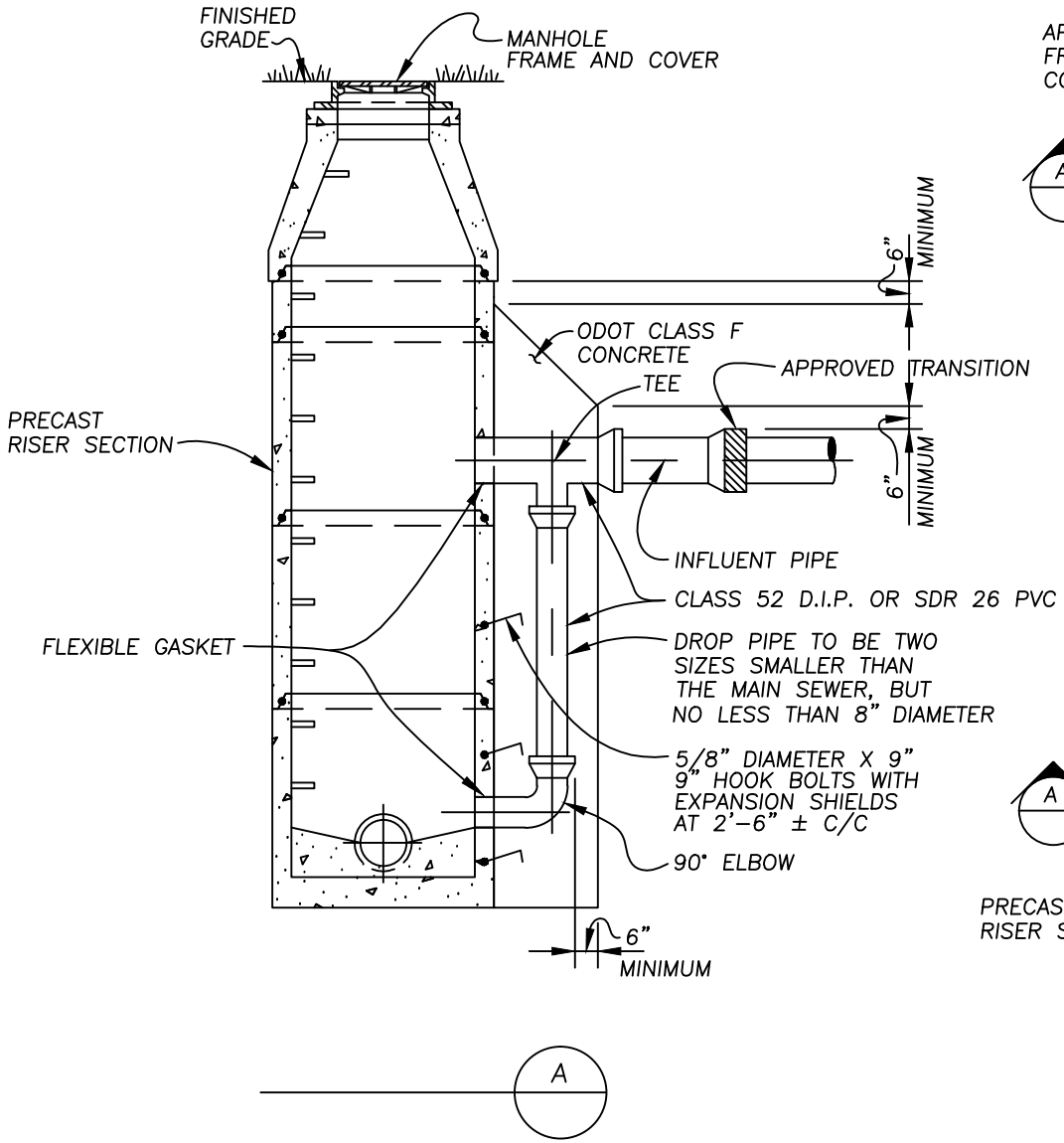

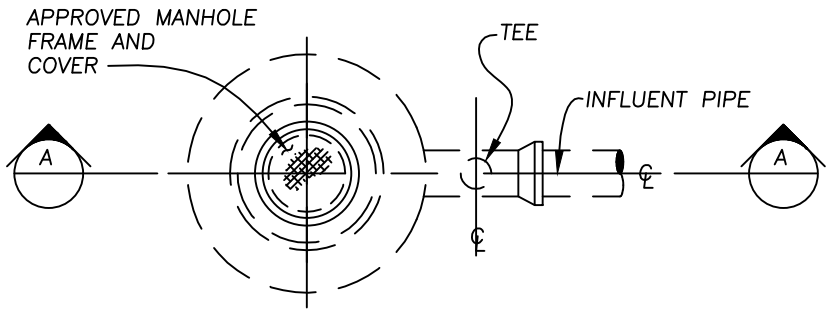

PLAN

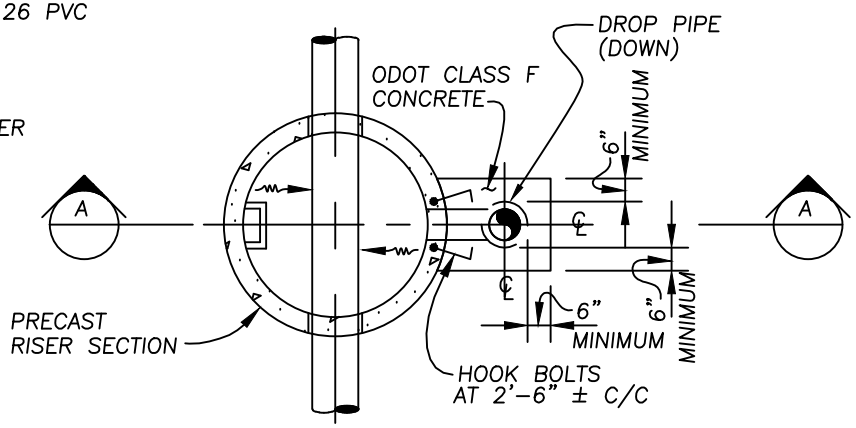

SECTIONAL PLAN

FIG 3.8.1

NOTES:

1. MANHOLE DETAILS SHALL CONFORM TO THE REQUIREMENTS OF THE APPLICABLE LCDU STANDARD MANHOLE DETAIL.
2. ALL MATERIALS SHALL BE AS LISTED IN THE LCDU APPROVED MATERIAL LIST.

LAKE COUNTY DEPARTMENT OF UTILITIES		
OUTSIDE DROP CONNECTION FOR MANHOLES		
DATE: 09-17	DRAWN BY: DDB	SCALE: NONE

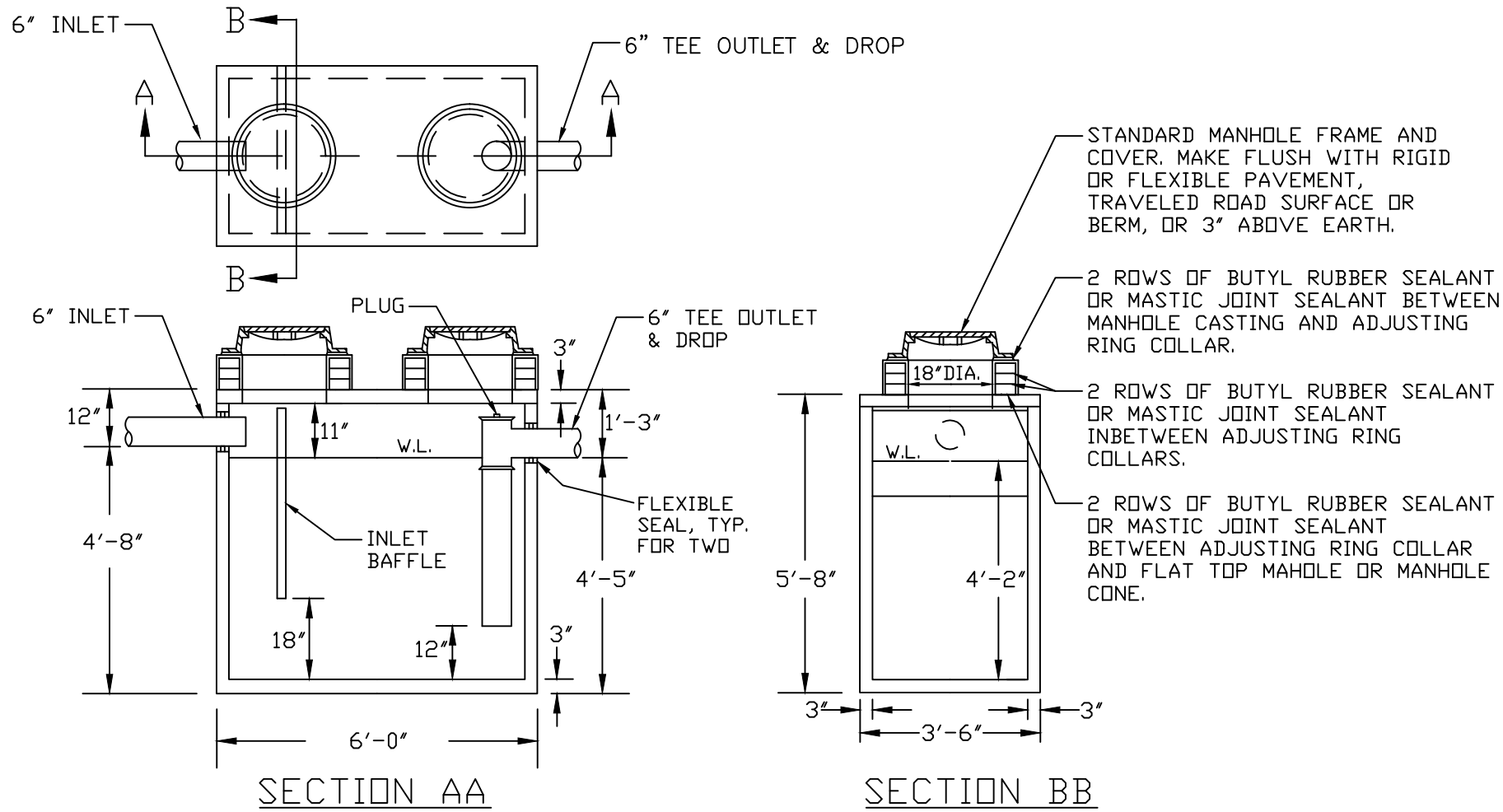

FIG. 3.9.2

NOTES:
1. REFER TO EXHIBIT Q FOR SIZING.
2. INLET AND OUTLET PIPE SHALL BE OF AN APPROVED MATERIAL
3. *BACKFILL UNDER STRUCTURE SHALL BE NO.57 LIMESTONE COMPACTED 6-INCHES DEEP. SEE SECTION 1.24 FOR COMPACTION REQUIREMENTS. THE BACKFILL MATERIAL SHALL EXTEND A MINIMUM OF 3 FEET BEYOND EACH EDGE OF THE STRUCTURE..*

LAKE COUNTY DEPARTMENT OF UTILITIES		
MINIMUM SIZE GREASE INTERCEPTOR		
DATE: 9-17	DRAWN BY: DDB	SCALE: NONE

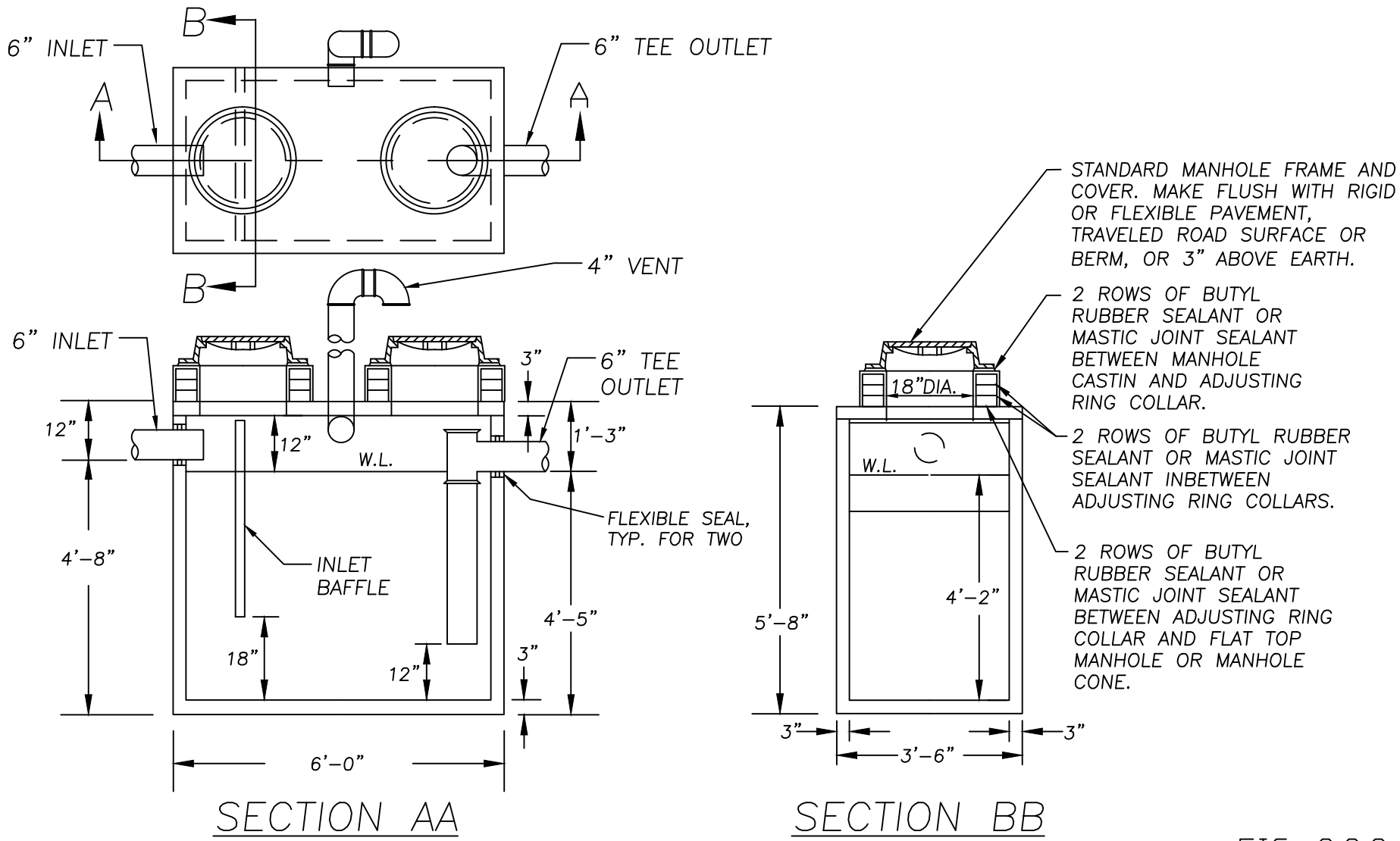

FIG. 3.9.3

NOTES:
1. 50 CUBIC FEET IS THE MINIMUM EFFECTIVE CAPACITY. ACTUAL SIZE SHALL BE AS DESIGNED AND SPECIFIED BY A REGISTERED PROFESSIONAL ENGINEER.
2. ALL VAULT DIMENSIONS ARE APPROXIMATE. ALTERNATE LAYOUTS MUST BE SUBMITTED FOR APPROVAL.
3. INLES AND OUTLET PIPE SHALL BE OF AN APPOVED MATERIAL.
4. BACKFILL UNDER STRUCTURE SHALL BE NO.57 LIMESTONE COMPACTED 6-INCHES DEEP. SEE SECTION 1.24 FOR COMPACTION REQUIREMENTS. THE BACKFILL MATERIAL SHALL EXTEND A MINIMUM OF 3 FEET BEYOND EACH EDGE OF THE STRUCTURE.

LAKE COUNTY DEPARTMENT OF UTILITIES		
MINIMUM SIZED OIL SEPARATOR		
DATE: 9-17	DRAWN BY: DDB	SCALE: NONE

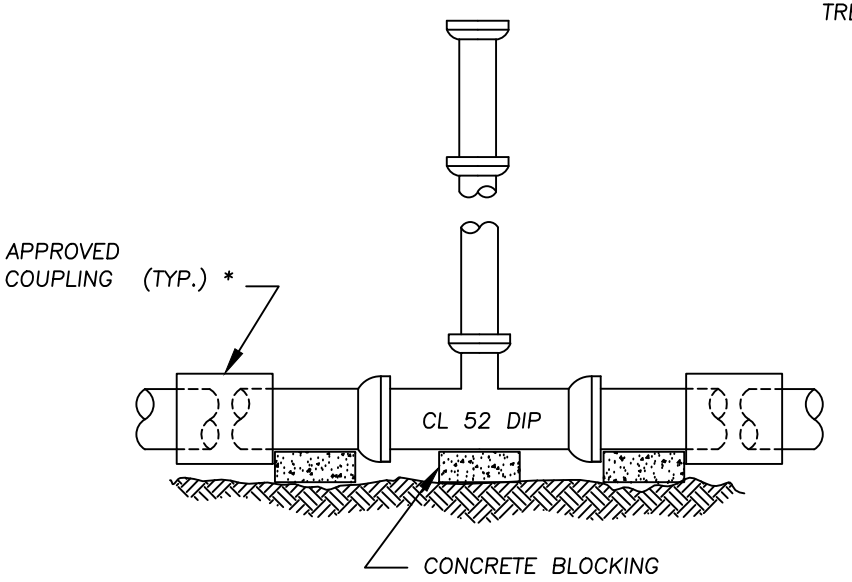

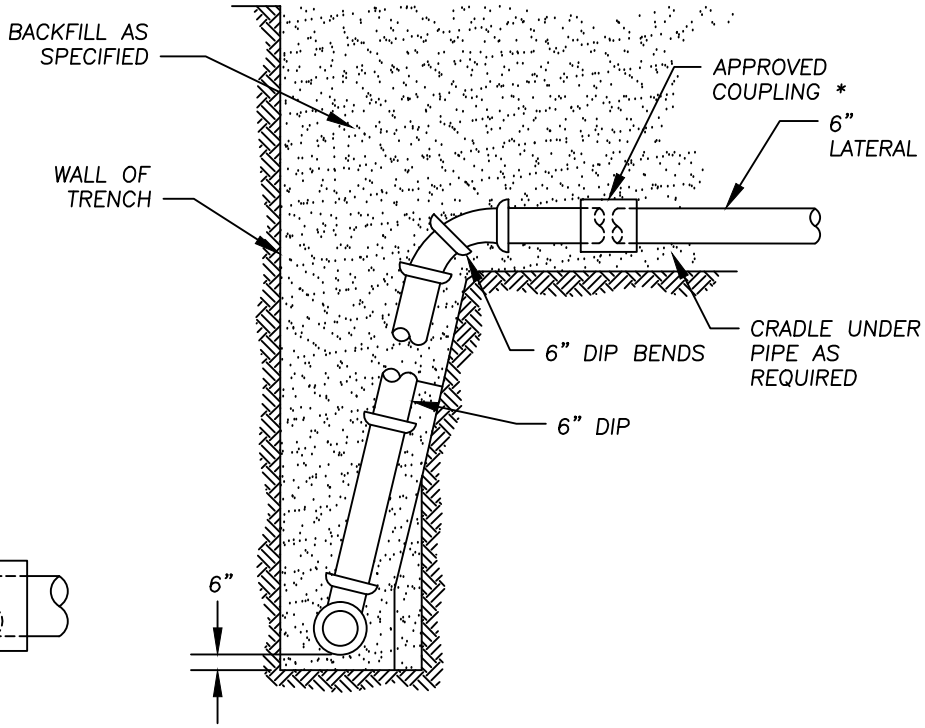

FIG 3.10.2

* = ALL MISSION COUPLINGS SHALL BE PROPERLY SPECIFIED FOR CONNECTING DISSIMILAR PIPE.

NOTE, ALL MATERIALS SHALL BE AS LISTED ON THE LCDU APPROVED MATERIAL LIST.

LAKE COUNTY DEPARTMENT OF UTILITIES		
DIP RISER DETAIL FOR SEWERS >10' DEEP		
DATE: 10-09	DRAWN BY: DDB	SCALE: NONE

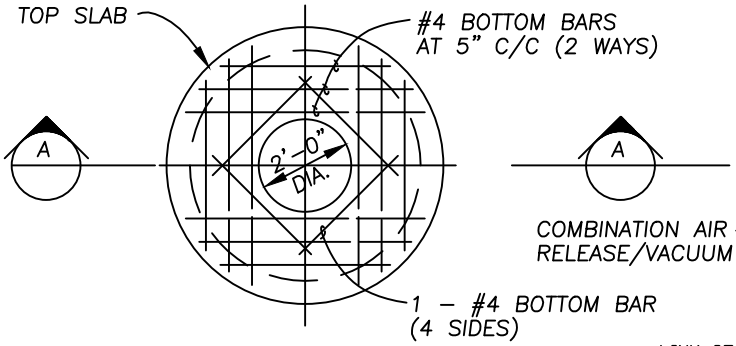

TOP SLAB REINFORCING PLAN

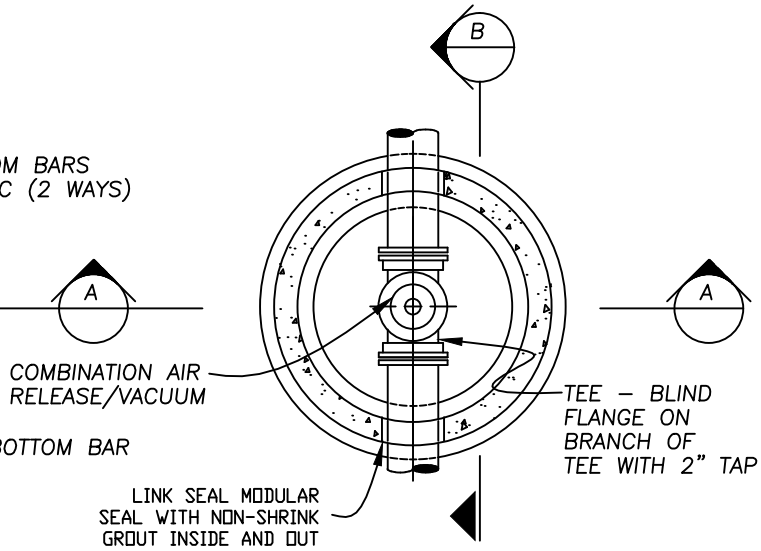

SECTIONAL PLAN

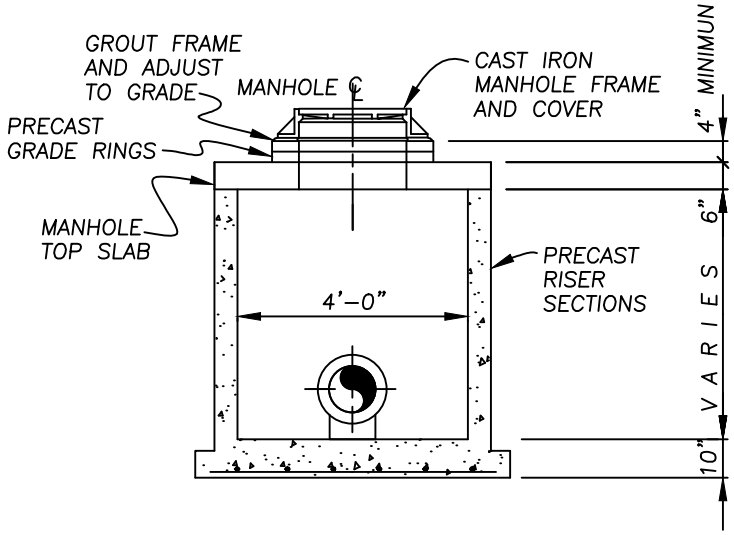

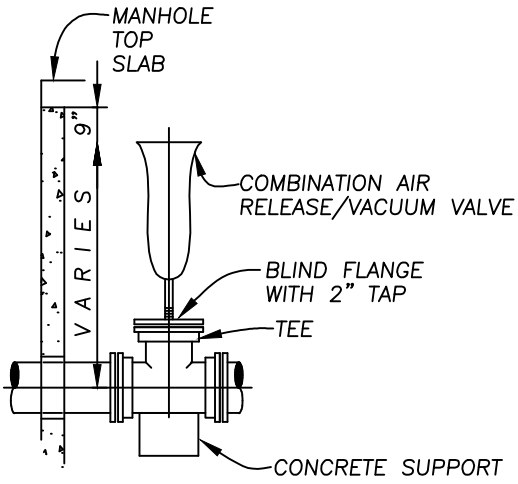

A

B

NOTES:

1. SEE PLANS FOR SIZE OF TEE.
2. SEE FIG 3.6.3 FOR MANHOLE CONSTRUCTION DETAILS.
3. ALL MATERIALS SHALL BE AS LISTED ON THE LCDU APPROVED MATERIAL LIST.

FIG 3.11.1

AIR RELEASE AND MANHOLE	
LOCATION	STATION

LAKE COUNTY DEPARTMENT OF UTILITIES		
AIR RELEASE & MANHOLE DETAILS		
DATE: 10–09	DRAWN BY: DDB	SCALE: NONE

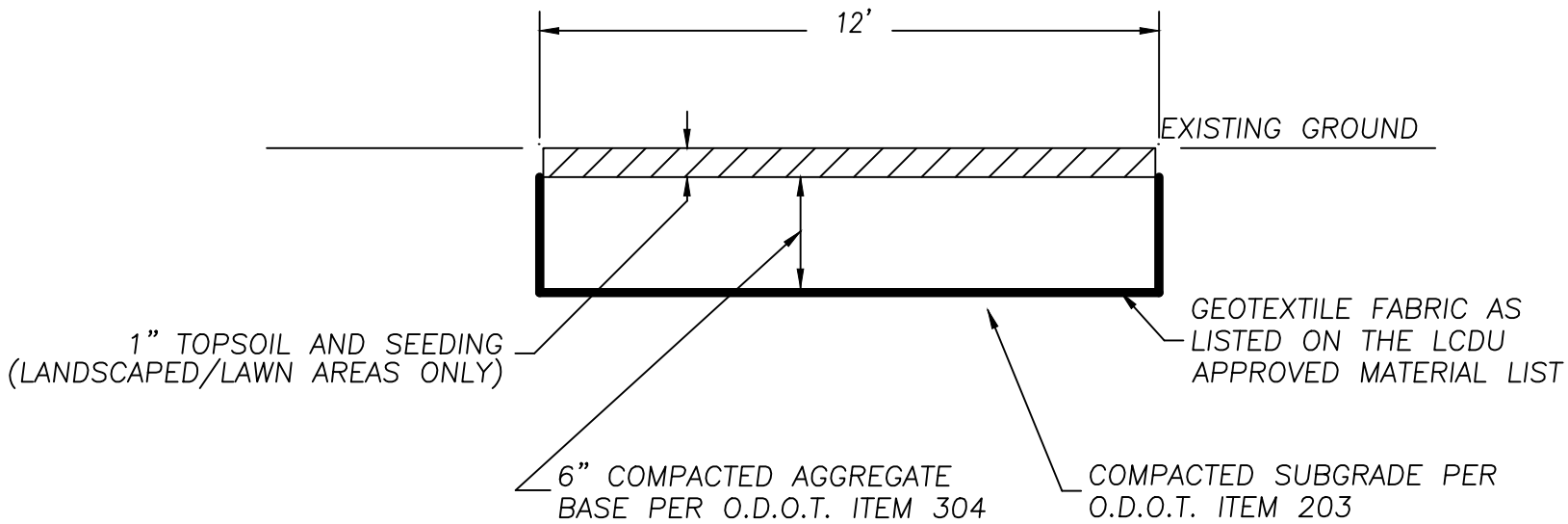

NOTE: REQUIRED FOR ANY SANITARY SEWER OR WATER LINE THROUGH AN EASEMENT.

FIG 3.12.4

LAKE COUNTY DEPARTMENT OF UTILITIES		
ACCESS ROAD TYPICAL SECTION		
DATE: 08-03	DRAWN BY: D.D.B.	SCALE: NONE

LAKE COUNTY'S APPROVED METHOD AND MATERIALS FOR READJUSTMENT OF EXISTING SANITARY SEWERS/LATERALS.

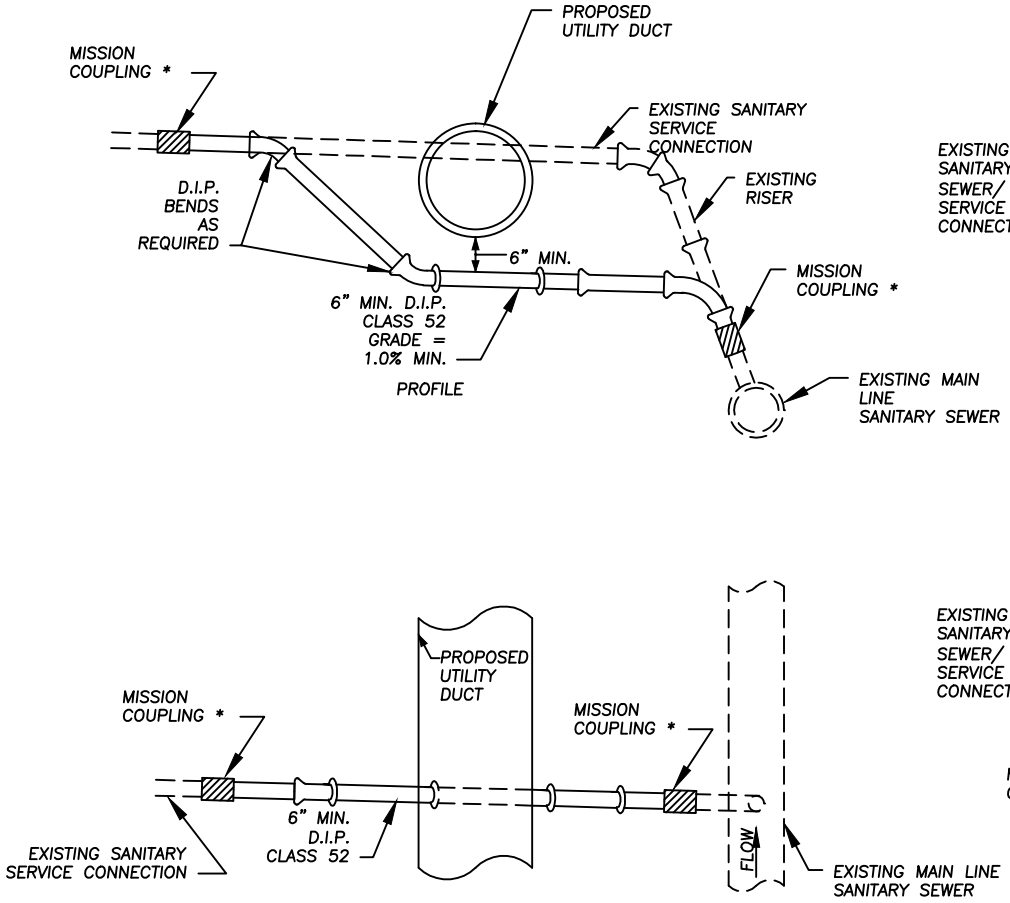

SANITARY CONNECTION MODIFICATION DETAIL

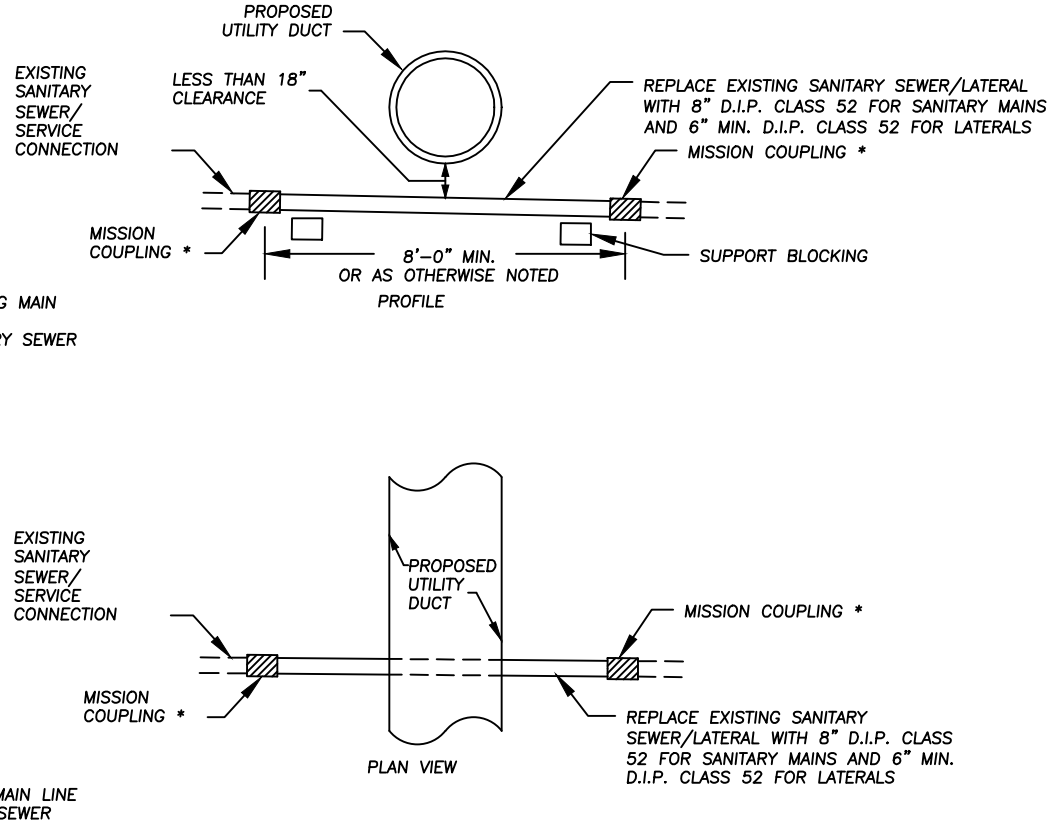

SANITARY CONNECTION REPLACEMENT DETAIL

FIG 3.14.1

NOTES:

1. IN ALL CASES WHERE A SANITARY SEWER OR LATERAL CROSSES OVER OR UNDER A WATER LINE AND/OR STORM SEWER WITH LESS THAN 18" CLEARANCE, THE SANITARY PIPE MATERIAL SHALL BE CLASS 52 D.I.P. THE D.I.P. SHALL BE THE LENGTH SPECIFIED ON THE PLANS, CENTERED ACROSS THE PIPE OR PIPES FOR WHICH THE CLEARANCE IS LESS THAN 18". THE LENGTH OF EACH D.I.P. CROSSING SHOWN ON THE PLANS IS EITHER IN FULL OR HALF INCREMENTS OF STANDARD D.I.P. LENGTH AND MAY VARY ONLY SLIGHTLY ACCORDING TO THE MANUFACTURER.
2. ALL MATERIALS SHALL BE AS LISTED IN THE LCDU APPROVED MATERIALS LIST.

* = ALL MISSION COUPLINGS SHALL BE PROPERLY SPECIFIED FOR CONNECTING DISSIMILAR PIPE.

LAKE COUNTY DEPARTMENT OF UTILITIES		
SANITARY CONNECTION DETAILS – REPLACEMENT & MODIFICATION		
DATE: 09–09	DRAWN BY: DDB	SCALE: NONE

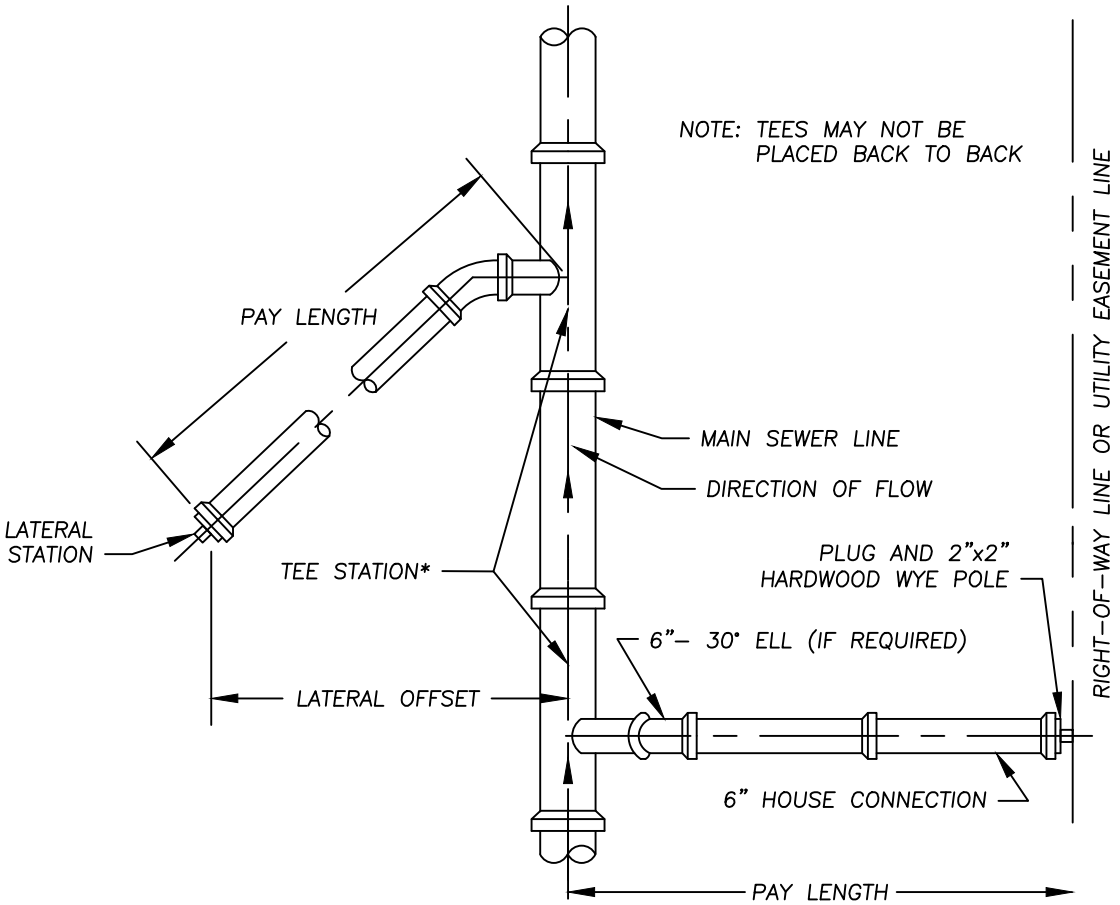

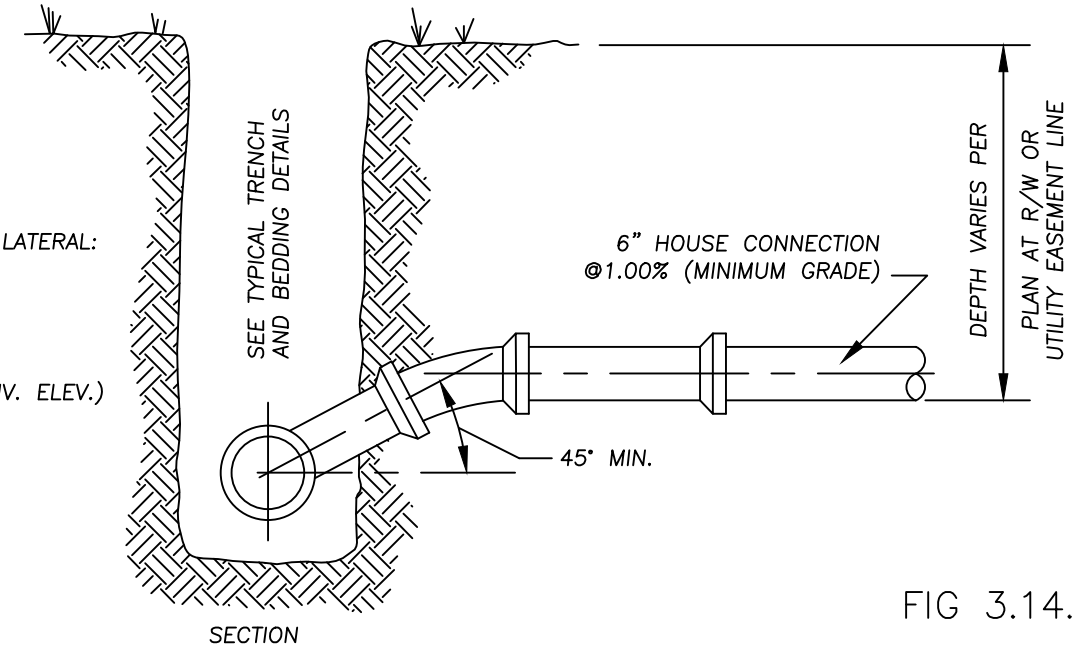

REQUIRED FOR EACH LATERAL:
- TEE STATION
- LATERAL STATION
- OFFSET
- PAY LENGTH
- RISE DEPTH
- LATERAL DEPTH (INV. ELEV.)

FIG 3.14.2

NOTE, ALL MATERIALS SHALL BE AS LISTED ON THE LCDU APPROVED MATERIAL LIST.

* = PROVIDE A MINIMUM OF 3 FEET SEPARATION BETWEEN TEE STATIONS.

LAKE COUNTY DEPARTMENT OF UTILITIES		
SEWER LATERAL DETAIL		
DATE: 10–09	DRAWN BY: DDB	SCALE: NONE

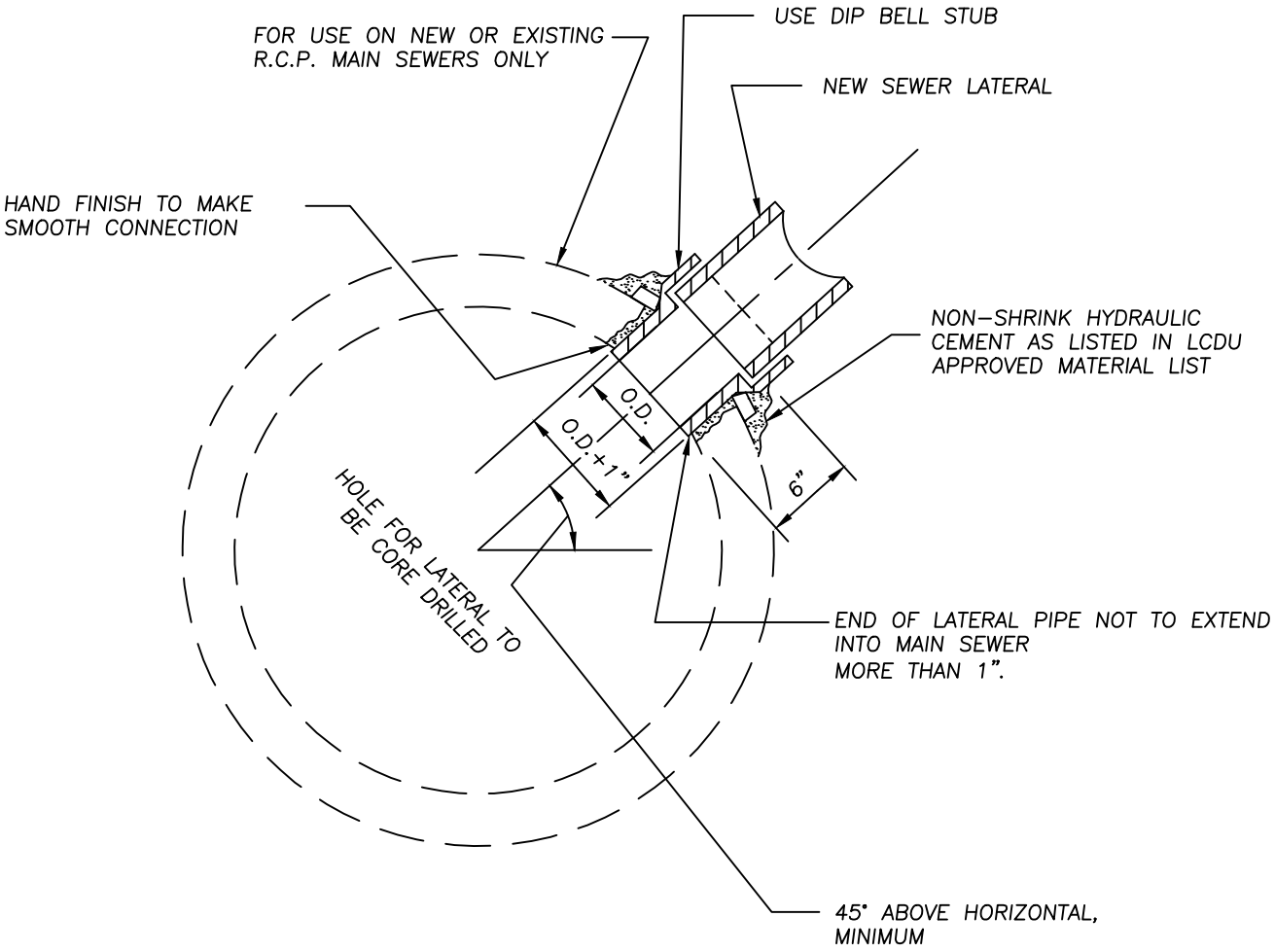

FIG 3.14.3

LAKE COUNTY DEPARTMENT OF UTILITIES		
RCP FIELD TEE CONNECTION		
DATE: 10-09	DRAWN BY: DDB	SCALE: NONE

MINIMUM COVER NOTE:
FOR VCP IN A GRASSY AREA THE MIN. COVER IS 3 FT. FOR VCP IN A DRIVE OR PARKING AREA THE MIN. COVER IS 4 FT. DIP HAS NO MIN. COVER.

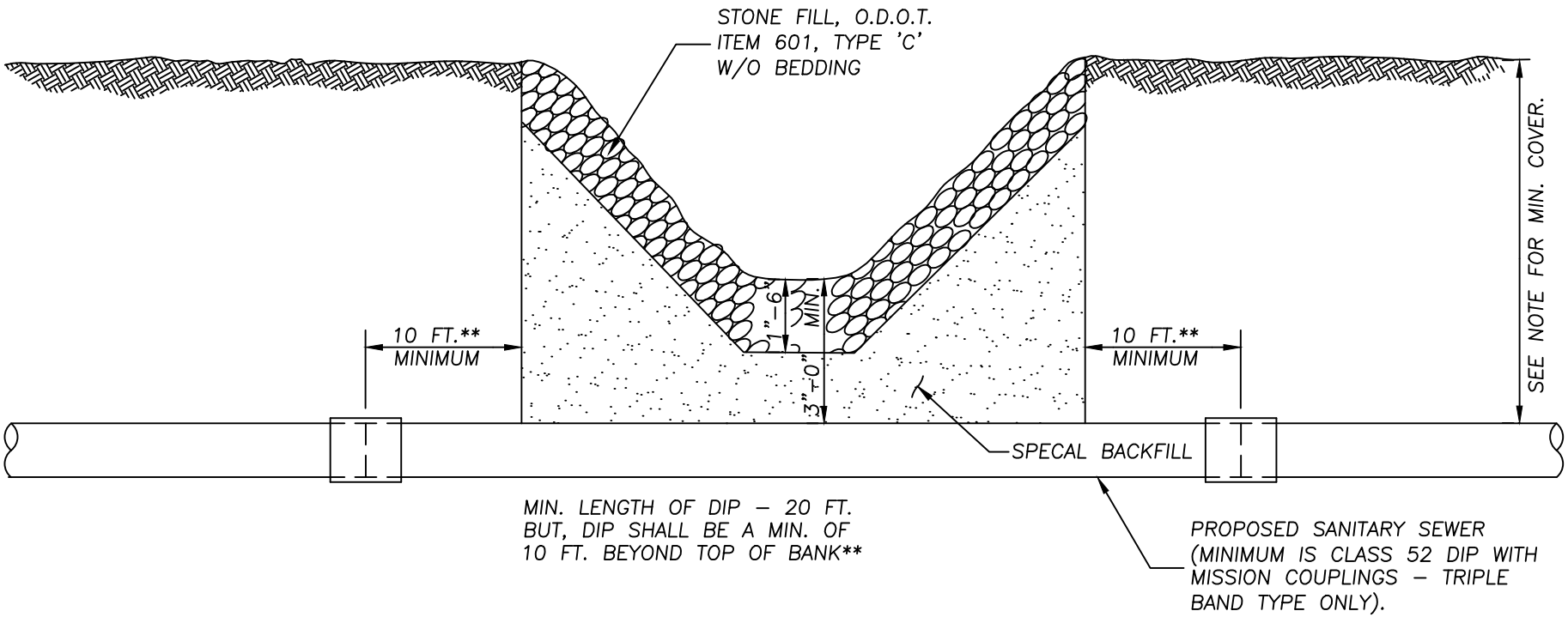

FIG 3.14.4

LAKE COUNTY DEPARTMENT OF UTILITIES		
SANITARY SEWER CREEK CROSSING DETAIL		
DATE: 10–09	DRAWN BY: DDB	SCALE: NONE

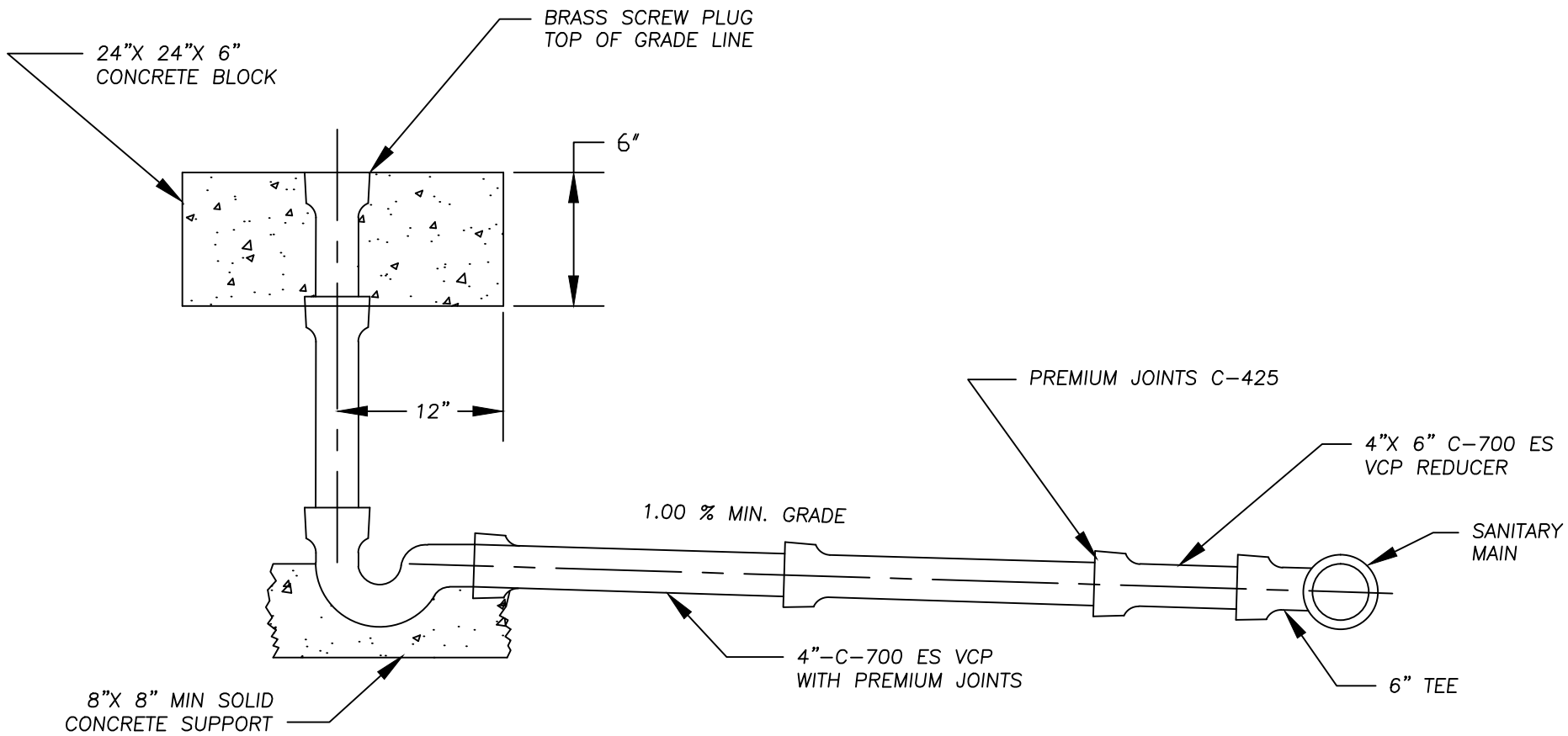

FIG 3.14.5

LAKE COUNTY DEPARTMENT OF UTILITIES		
MOBILE HOME TRAILER PAD SANITARY CONNECTION		
DATE: 08-03	DRAWN BY:-	SCALE: NONE

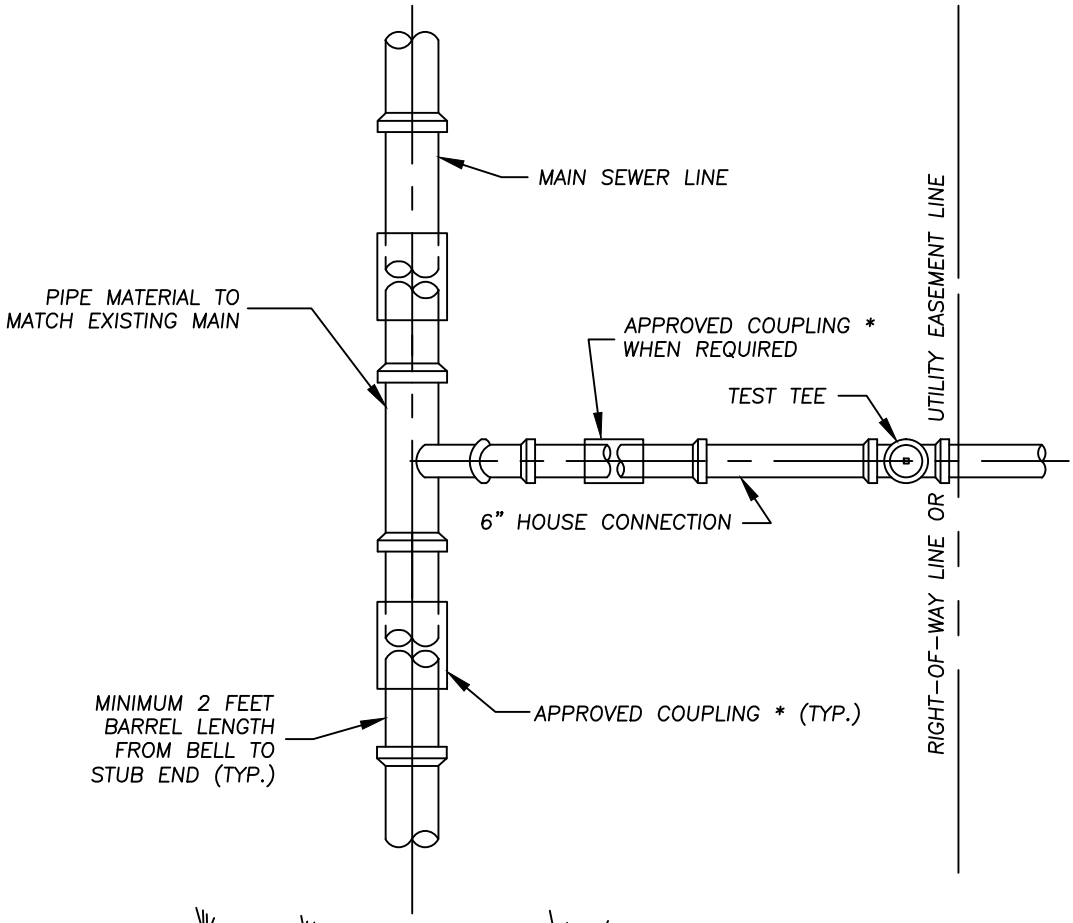

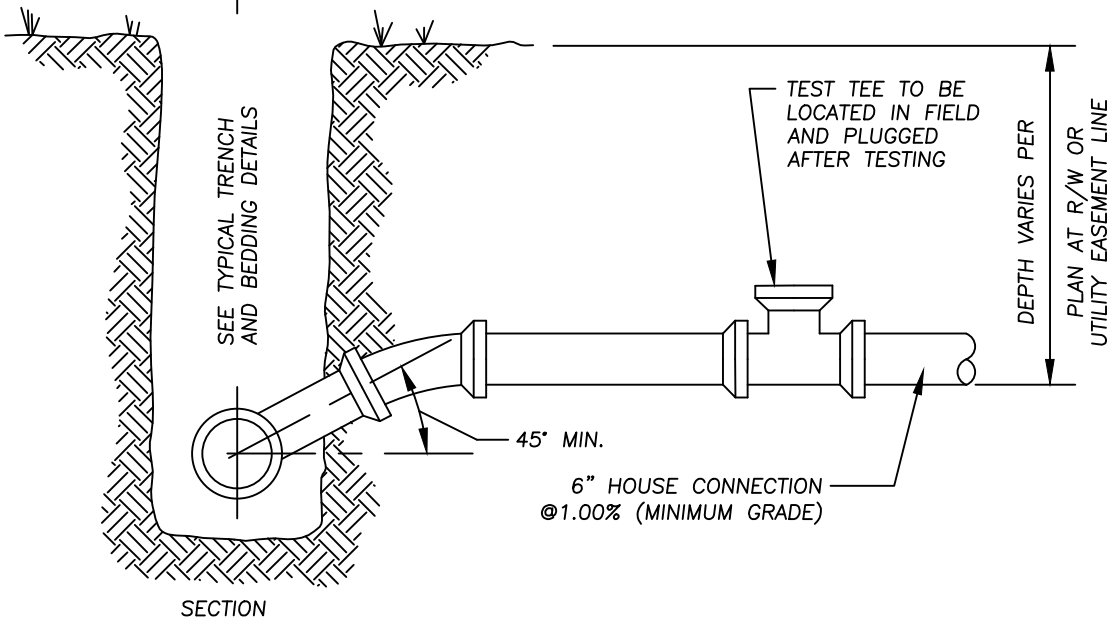

NOTES:

1. FOR PVC PIPE, EMBED PIPE IN #57 STONE 6" IN ALL DIRECTIONS FOR FULL LENGTH OF THE LATERAL.
2. ALL MATERIALS SHALL BE AS LISTED IN THE LCDU APPROVED MATERIAL LIST.
3. * = ALL MISSION COUPLINGS SHALL BE PROPERLY SPECIFIED FOR CONNECTING DISSIMILAR MATERIALS.

FIG.3.14.6

LAKE COUNTY DEPARTMENT OF UTILITIES		
CUT-IN TEE DETAIL FOR D.I.P, P.V.C. & V.C.P SERVICES		
DATE: 10-09	DRAWN BY: DDB	SCALE: NONE

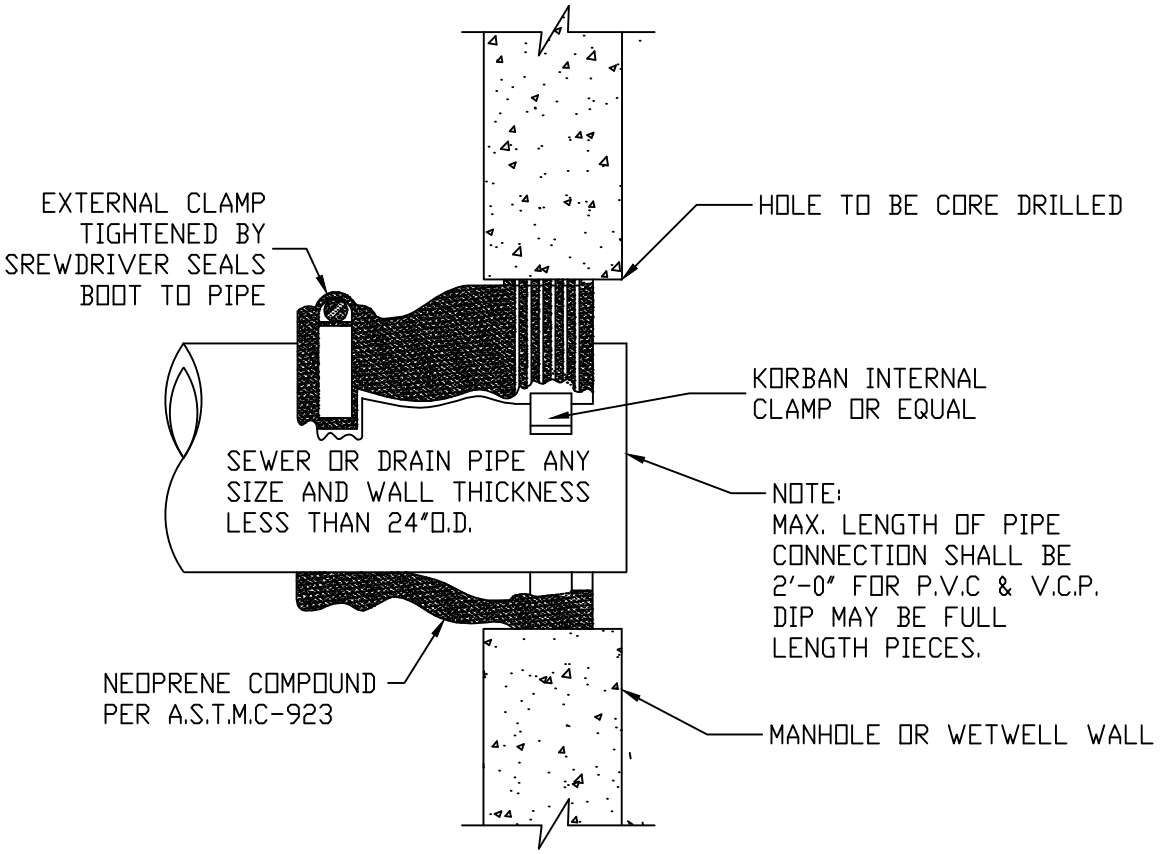

FOR EXISTING STRUCTURES ONLY

FIG. 3.14.7

LAKE COUNTY DEPARTMENT OF UTILITIES		
SANITARY SEWER FLEXIBLE GASKET DETAIL		
DATE: 11/07	DRAWN BY: D.D.B.	SCALE: NONE

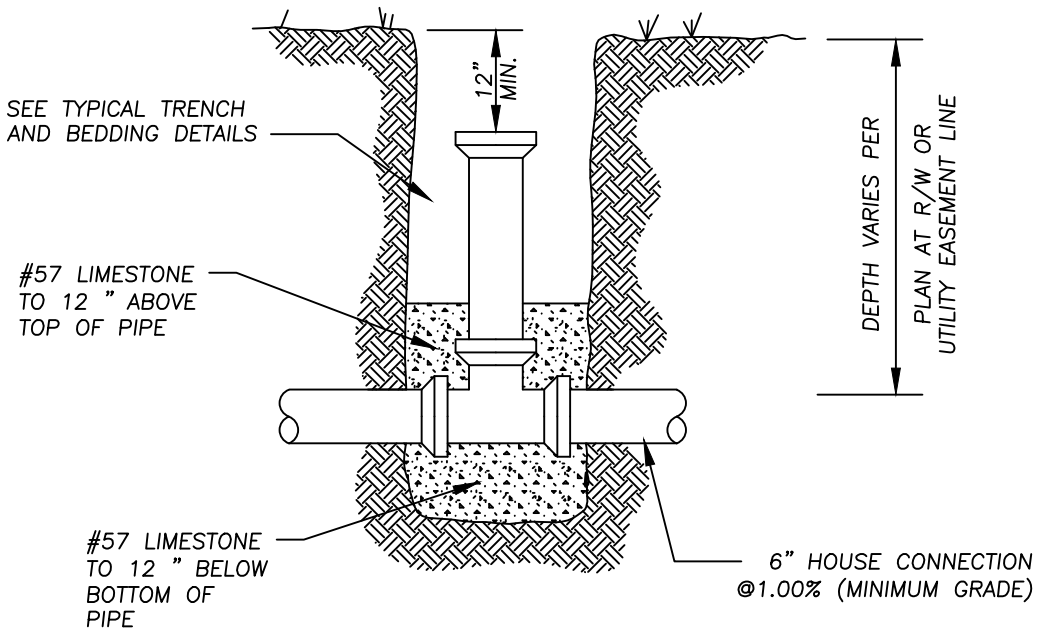

NEW INSTALLATION

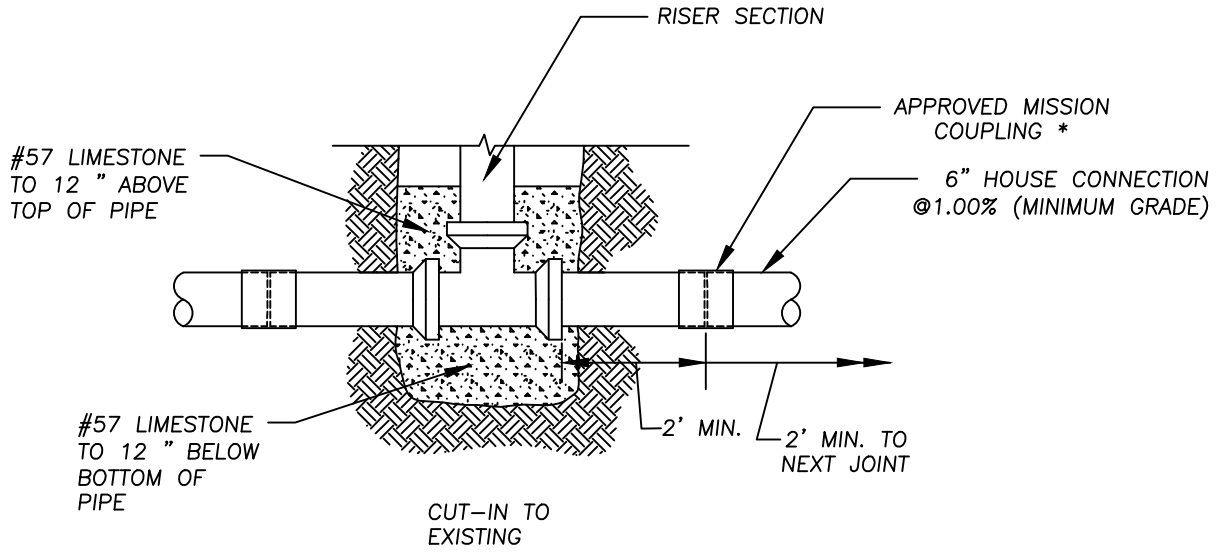

CUT–IN TO EXISTING

NOTES:

1. ALL MATERIALS SHALL BE AS LISTED IN THE LCDU APPROVED MATERIAL LIST.
2. RESIDENTIAL CLEANOUT SHALL BE INSTALLED AT OR NEAR THE PROPERTY LINE AS PART OF THE EXTENSION OF THE LATERAL TO THE BUILDING.
3. RISER SECTION SHALL BE ONE LENGTH OF CONTINUOUS PIPE.
4. RISER SHALL BE PLUGGED WITH AN APPROVED PLUG FITTED WITH A CAST OR DUCTILE IRON DISK OR IMBEDDED MAGNETTIC ELEMENT AND PAINTED YELLOW.
5. * = ALL MISSION COUPLINGS SHALL BE PROPERLY SPECIFIED FOR CONNECTING DISSIMILAR PIPE.

FIG.3.14.8

LAKE COUNTY DEPARTMENT OF UTILITIES		
RESIDENTIAL CLEANOUT DETAIL		
DATE: 11–15	DRAWN BY: DDB	SCALE: NONE

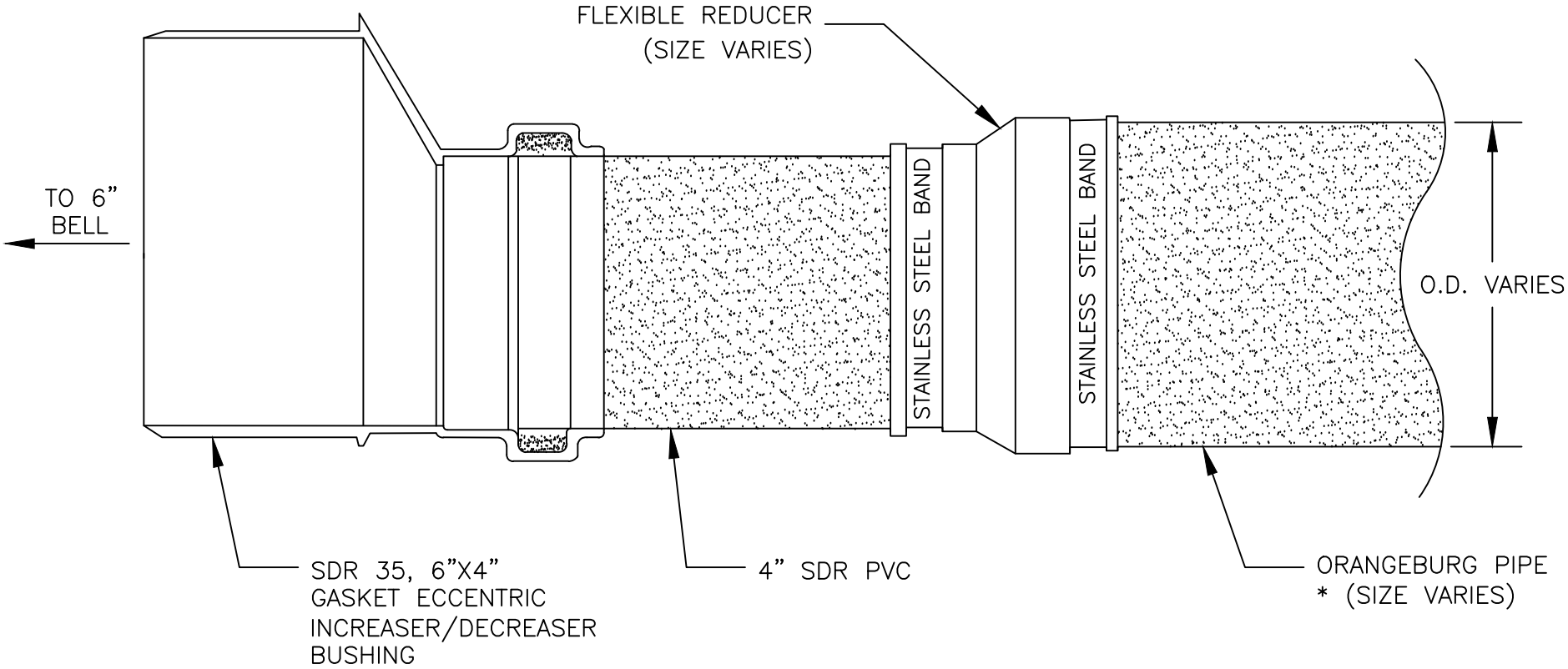

FIG 3.14.9

NOTE:
6" OF #57 STONE TO BE PLACED ALL AROUND THE NEW PIPE INSTALLATION.

* IT MAY BE REQUIRED TO INSERT A PVC STIFFENER IN THE O.D. OF THE ORANGEBURG PIPE TO KEEP IT FROM COLLAPSING.

LAKE COUNTY DEPARTMENT OF UTILITIES		
RESIDENTIAL LATERAL REPAIR DETAIL 6" PVC TO ORANGEBURG PIPE CONNECTION		
DATE: 3–14	DRAWN BY: SC	SCALE: NONE

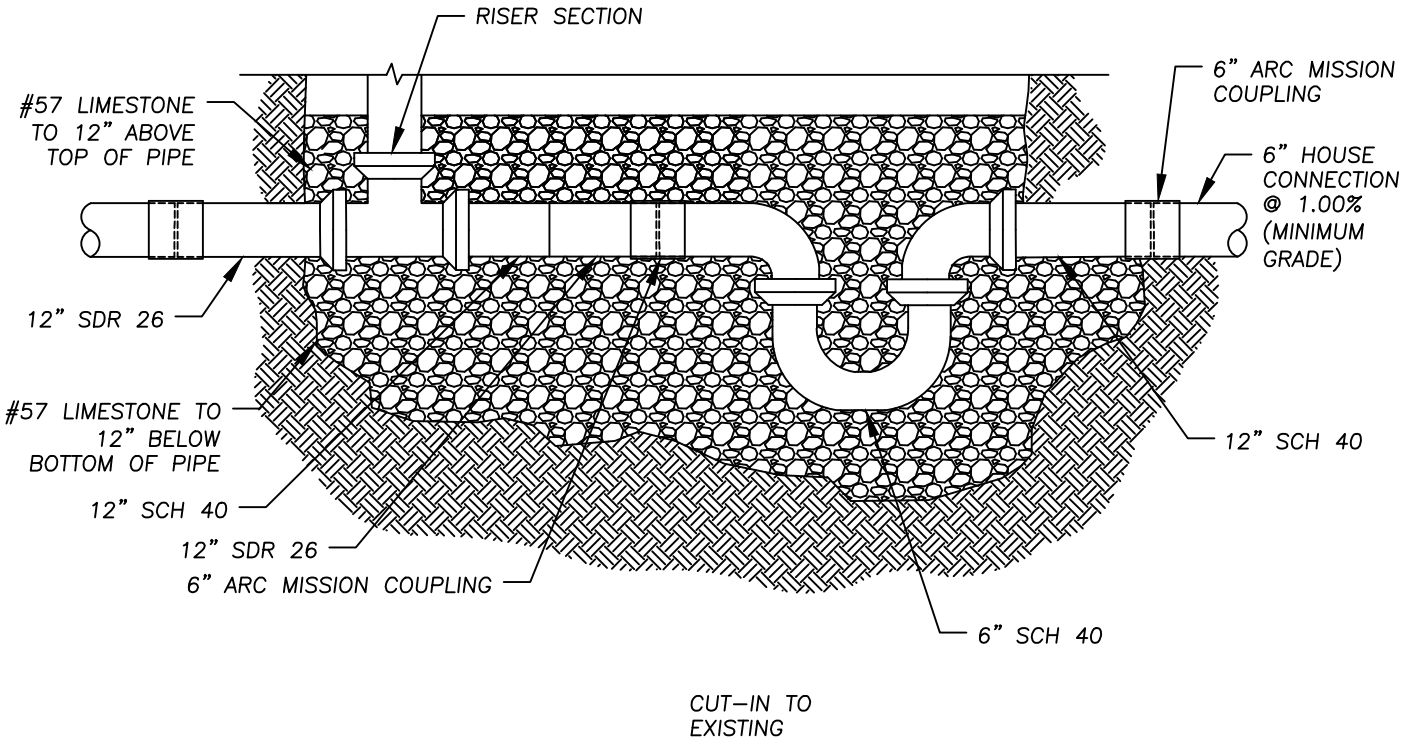

NOTES:

1. ALL MATERIALS SHALL BE AS LISTED IN THE LCDU APPROVED MATERIAL LIST.
2. RESIDENTIAL CLEANOUT SHALL BE INSTALLED AT OR NEAR THE PROPERTY LINE AS PART OF THE EXTENSION OF THE LATERAL TO THE BUILDING.
3. RISER SECTION SHALL BE ONE LENGTH OF CONTINUOUS PIPE.
4. RISER SHALL BE PLUGGED WITH AN APPROVED PLUG FITTED WITH A CAST OR DUCTILE IRON DISK OR IMBEDDED MAGNETTIC ELEMENT AND PAINTED YELLOW.
5. * = ALL MISSION COUPLINGS SHALL BE PROPERLY SPECIFIED FOR CONNECTING DISSIMILAR PIPE.

3.14.10

LAKE COUNTY
DEPARTMENT OF UTILITIES

REPLACEMENT TRAP DETAIL

DATE: 1-2020	DRAWN BY: SC	SCALE: NONE

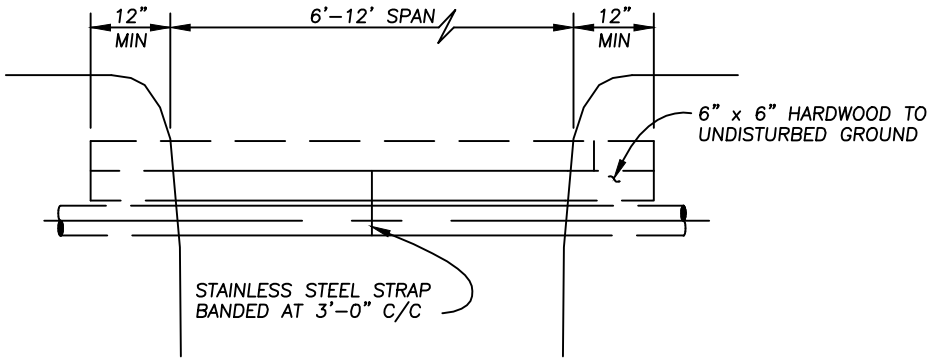

1 – 6" x 6" HARDWOOD SUPPORT UP TO 8' SPAN.
2 – 6" x 6" HARDWOOD SUPPORT UP TO 12' SPAN.

SECTION

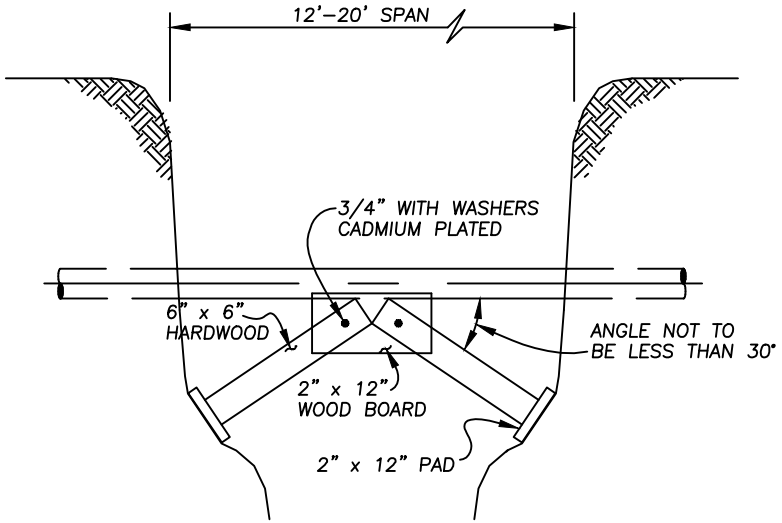

SECTION

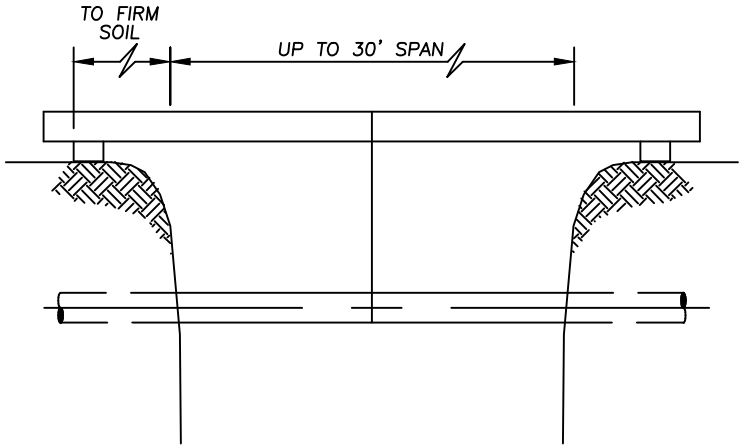

SECTION

FOR SPANS UP TO 12' A 6" x 6" HARDWOOD MAY BE USED.
OVER 12' USE A CLASS 4 OR BETTER UTILITY POLE. (ACCEPTABLE ALTERNATES INCLUDE 6" –.219" WALL PIPE OR 6" x 3 I – BEAM.)
BACKFILL MUST BE COMPLETELY COMPACTED OR PERMANENT SUPPORTS INSTALLED, OR NATURAL SETTLEMENT COMPLETE PRIOR TO REMOVING EXPOSED SUPPORTS.
THIS METHOD OF SUPPORT IS TO BE USED FOR 6" AND 8" SANITARY MAINS AND LATERALS ONLY.

THIS SYSTEM MAY BE USED FOR LONGER SPANS (UP TO 30') BY USE OF 6" x 6" CENTER HARDWOOD.

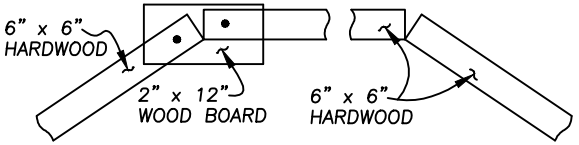

FIG 3.15.1

LAKE COUNTY DEPARTMENT OF UTILITIES		
SUPPORT OF SANITARY UTILITIES PERPENDICULAR TO EXCAVATION		
DATE: 09–10	DRAWN BY: D.D.B.	SCALE: NONE

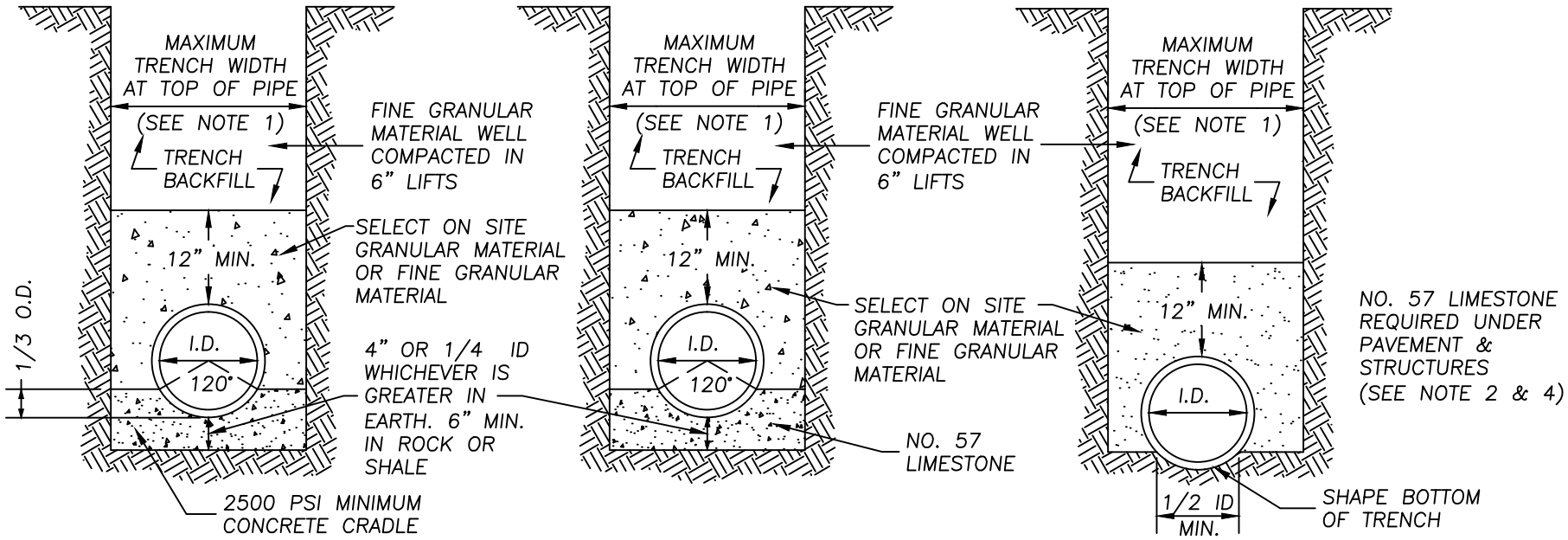

CLASS "A" BEDDING

CLASS "B" BEDDING

CLASS "C" BEDDING

NOTES:

1. MAXIMUM TRENCH WIDTH AT TOP OF PIPE SHALL BE O.D. +24" FOR ALL PIPE SIZES UP TO AND INCLUDING 24" I.D., AND O.D. +30" FOR PIPE LARGER THAN 24" I.D.
2. PIPE BACKFILL UNDER PAVEMENT AND STRUCTURES SHALL BE NO.46 OR NO.57 LIMESTONE COMPACTED TO TOP OF TRENCH. SEE SECTION 1.24 FOR COMPACTION REQUIREMENTS. THE BACKFILL MATERIAL SHALL EXTEND A MINIMUM OF 3 FEET BEYOND EACH EDGE OF PAVEMENT OR STRUCTURE. IN AREAS OUTSIDE OF PAVEMENT, SELECT ON-SITE GRANULAR MATERIAL APPROVED BY LAKE COUNTY SANITARY ENGINEER MAY BE USED IN LIFTS NOT TO EXCEED 6" FOR PIPE BACKFILL ABOVE BEDDING.
3. ALL BEDDING SHALL BE CLASS "B" UNLESS OTHERWISE NOTED ON THE PLANS OR AUTHORIZED BY THE ENGINEER.
4. SLAG SHALL NOT BE USED FOR BEDDING OR BACKFILL.
5. CLAY DAMS SHALL BE REQUIRED WHEN AND WHERE NECESSARY PER THE SOLE DISCRETION OF THE LCDU.
6. THESE SPECIFICATIONS ARE TO BE CONSIDERED MINIMUM REQUIREMENTS AND ARE SUPERSEDED BY THE REQUIREMENTS OF THE LOCAL AUTHORITY WITH JURISDICTION OVER THE ROADWAY, WHEN APPLICABLE.
7. FOR PVC PIPE SEE FIG 3.17.2

FIG 3.17.1

SANITARY SEWER
VCP OR DIP PIPE ONLY

LAKE COUNTY DEPARTMENT OF UTILITIES		
TRENCH AND BEDDING DETAILS		
DATE: 11-14	DRAWN BY: DDB	SCALE: NONE

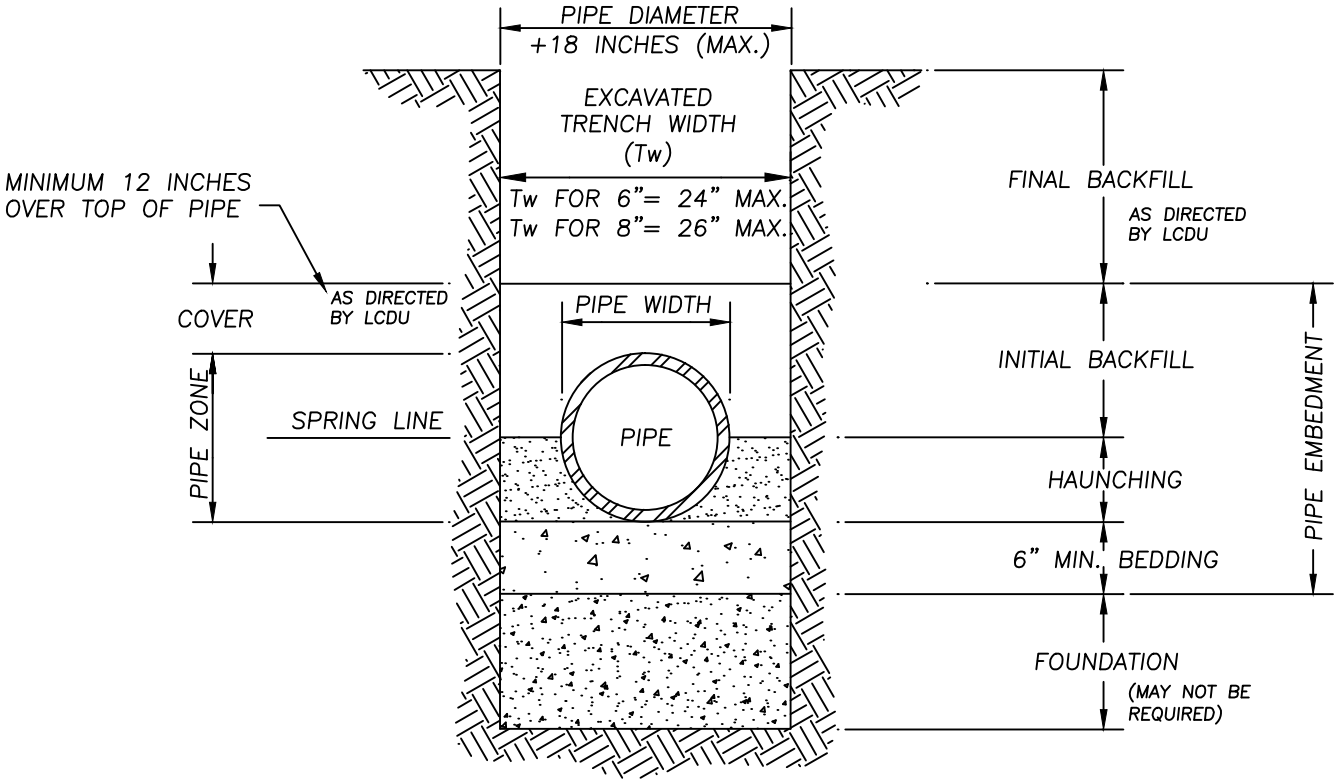

NOTES:

1. FOUNDATION, BEDDING, HAUNCHING AND INITIAL BACKFILL SHALL BE NO. 57 LIMESTONE ONLY, AND HAUNCHING MATERIAL MUST BE WORKED UNDER HAUNCHES.

2. FINAL BACKFILL TO SUBGRADE SHALL BE IN ACCORDANCE WITH ALL REQUIREMENTS AND STANDARDS OF THE PUBLIC AGENCY HAVING PRIMARY JURISDICTION. UNLESS OTHERWISE SO STIPULATED THE FINAL BACKFILL SHALL BE ODOT 304 LIMESTONE TO SUBBASE LIMITS UNDER ALL PAVEMENT, WALKS, STRUCTURES, ETC.
3. WHEN SHEETING, STAY BRACING OR A TRENCH BOX IS USED OR UNSTABLE TRENCH WALLS ARE ENCOUNTERED, THE BEDDING WIDTH SHALL BE FIVE (5) PIPE DIAMETERS.
4. SLAG BEDDING SHALL NOT BE USED.
5. CLAY DAMS SHALL BE REQUIRED WHEN AND WHERE NECESSARY PER THE SOLE DISCRETION OF THE LCDU.
6. THESE SPECIFICATIONS ARE TO BE CONSIDERED MINIMUM REQUIREMENTS AND ARE SUPERSEDED BY THE REQUIREMENTS OF THE LOCAL AUTHORITY WITH JURISDICTION OVER THE ROADWAY, WHEN APPLICABLE.
7. ALL BACKFILL SHALL BE COMPACTED IN ACCORDANCE WITH SECTION 1.24.

FIG 3.17.2

LAKE COUNTY DEPARTMENT OF UTILITIES		
STANDARD FLEXIBLE PIPE TRENCH AND BEDDING DETAILS		
DATE: 10-09	DRAWN BY: DDB	SCALE: NONE

PERMITTED

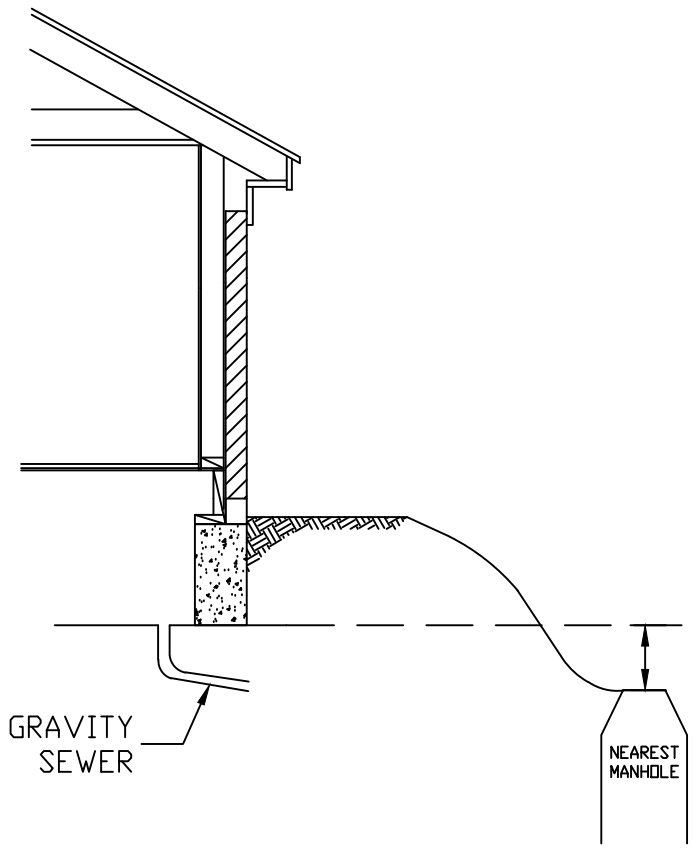

NOT PERMITTED

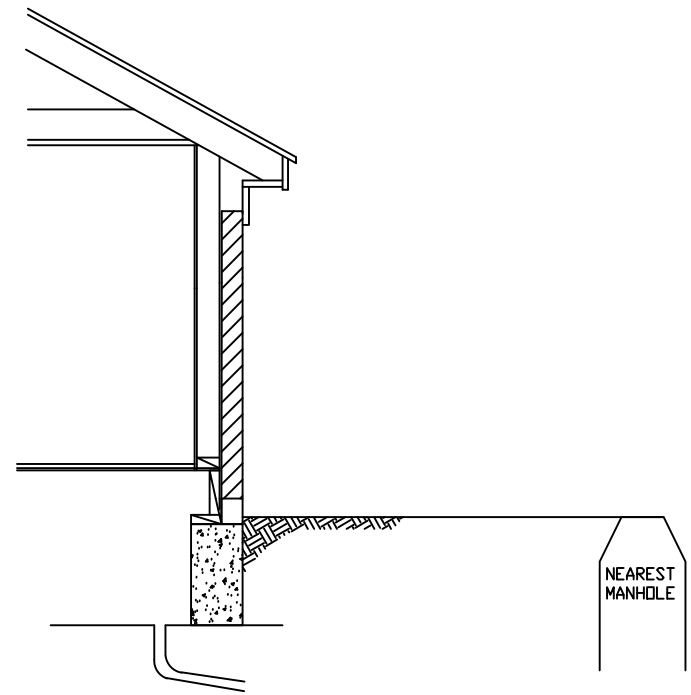

GRAVITY BASEMENT SERVICE IS ONLY PERMITTED WHEN THE FOLLOWING CRITERIA ARE MET:

1. THE LOWEST FLOOR LEVEL OF THE BUILDING BEING SERVED BY GRAVITY SHALL BE AN ELEVATION HIGHER THAN THE NEAREST PUBLIC SANITARY MANHOLE RIM.
2. APPROVAL FOR BASEMENT GRAVITY SERVICE SHALL BE OBTAINED FROM THE SANITARY ENGINEER BASED ON SITE PLAN ELEVATIONS AS PREPARED BY A LICENSED PROFESSIONAL SURVEYOR AND VERIFIED AFTER THE FINISHED FLOOR IS POURED PRIOR TO ISSUANCE OF SANITARY CONNECTION PERMIT.

FIG 3.20.1

LAKE COUNTY DEPARTMENT OF UTILITIES		
SANITARY SERVICE CONNECTIONS GRAVITY BASEMENT SERVICE		
DATE: 06-19	DRAWN BY: SC	SCALE: NONE

Section 4 – Solid Waste Acceptance

4.01. PURPOSE 4-1
4.02. REFERENCES 4-1
4.03. DEFINITIONS 4-1
4.04. POLICIES 4-4
A. Aerosol Cans 4-4
B. Asbestos-Containing Waste 4-4
C. Autoclave Wastes 4-4
D. Batteries 4-5
E. Biomedical Waste 4-5
F. Biosolids 4-5
G. Catch Basin Residue And Vactor Waste 4-5
H. Computer Monitors 4-5
I. Construction, Demolition (CD) Waste 4-5
J. Drum Containers 4-5
K. Dusty Material 4-5
L. Explosives 4-6
M. Fluorescent Lights 4-6
N. Food Products 4-6
O. Grease 4-6
P. Hazardous/Dangerous Waste 4-6
Q. Household Hazardous Wastes 4-6
R. Industrial Waste 4-6
S. Laboratory Waste 4-6
T. Latex Paint 4-6
U. Liquids 4-6
V. Medical Waste 4-6
W. Motor Oil 4-6
X. Motor Vehicles And Major Vehicle Parts 4-7
Y. Odorous Waste 4-7
Z. Oil Filters 4-7
AA. Oversized Materials 4-7

BB. Pesticides 4-7
CC. Polystyrene Packing Material 4-7
DD. Propane Tanks 4-7
EE. Roofing Material 4-7
FF. Sharps Waste 4-7
GG. Sludge 4-7
HH. Soils 4-7
II. Tanks 4-7
JJ. Thermometers 4-7
KK. Tires 4-8
LL. Vactor Waste 4-8
MM. White Goods 4-8
NN. Yard Waste 4-8
OO. Other Waste 4-8
PP. Denial Of Entry 4-8
QQ. Emergency 4-8
RR. Enforcement 4-8
4.05. PROCEDURES 4-8
4.06. RESPONSIBILITIES 4-8
4.07. SPECIAL WASTE CLEARANCE 4-9
4.08. OPENING A SOLID WASTE DIVISION ACCOUNT 4-9

Exhibit A LOAD INSPECTION FORM
Exhibit B APPLICATION FOR CREDIT FORM

SECTION 4 – SOLID WASTE ACCEPTANCE

4.01. PURPOSE

The LCDU Solid Waste Division accepts wastes at County facilities pursuant to this Rule. This Rule promotes governmental efficiency and affords citizens fair notice and process. This Rule is promulgated to preserve and protect the public health, safety and welfare.

4.02. REFERENCES

A. Lake County Solid Waste Landfill Master Plan. (2009)

B. National Emission Standards for Hazardous Air Pollutants, 40 CFR Part 61.

C. Federal Clean Air Act Amendments of November 14, 1990, 42 U.S.C. 7450-7459, Title VI -- Stratospheric Ozone Protection.

D. Lake County Board of Health Code, Title 10, Lake County Solid Waste Regulations.

E. Ohio Administrative Code 3745-27-19, Operational Criteria for a Sanitary Landfill Facility.

F. House Bill 592.

4.03. DEFINITIONS

A. Asbestos-Containing Material shall mean any material containing more than one percent (1%) asbestos, as determined using the method specified in EPA regulations Appendix A, Subpart F, 40CFR Part 763, Section 1, Polarized Light Microscopy or OAC 3745-20-01.

B. Biomedical Waste shall mean and shall be limited to carcasses of animals exposed to pathogens, Biosafety level 4 disease waste, cultures and stocks of etiologic agents, human blood and blood products, pathological waste, sharps waste and other waste determined to be infectious by the generator's infection control staff or committee.

C. Biosafety Level 4 Disease Waste shall mean waste contaminated with blood, excretions, exudates, or secretions from humans or animals who are isolated to protect others from highly communicable infectious diseases that are identified as pathogenic organisms assigned to Biosafety Level 4 by the Centers for Disease Control, National Institute of Health, Biosafety in Microbiological and Biomedical Laboratories, current edition.

D. Biosolids shall mean municipal sewage sludge that is principally organic, semisolid product resulting from the wastewater treatment process that can be beneficially recycled and meets all applicable requirements under OAC 3745-40-01 (Q). Biosolids includes material derived biosolids and septic tank sludge, also known as septage, that can be beneficially recycled and meets all applicable requirements.

E. Construction and Demolition Debris (CDD) shall mean the current definition in ORC 3714.01 (C) Generally, waste generated during construction or demolition may include, but is not limited to: concrete, brick, wood, masonry, composition roofing, roofing paper, shakes, shingles, linoleum,

glass, steel, aluminum, copper, galvanized or plastic piping, sheet rock (also called drywall or plasterboard) and plaster. In no event shall construction and demolition debris include dangerous or extremely hazardous waste of any kind, garbage, sewage waste, animal carcasses, chemical waste, petroleum waste, or asbestos.

F. Container shall mean a device used for the collection, storage, and/or transportation of solid waste including, but not limited to, reusable containers, disposable containers, detachable containers and fixed or detachable tanks.

G. Contaminated Soil shall mean soil containing contaminants at concentrations greater than cleanup levels established by the Ohio EPA and which is not a dangerous waste.

H. Cultures And Stocks shall mean wastes infectious to humans and includes specimen cultures, cultures and stocks of etiologic agents, wastes from production of biologicals and serums, discarded live and attenuated vaccines, and laboratory waste that has come into contact with cultures and stocks of etiologic agents or blood specimens. Such waste includes but is not limited to culture dishes, blood specimen tubes, and devices used to transfer, inoculate and mix cultures.

I. Drum Containers shall mean rigid containers larger than 25 gallons made of fiber, plastic, steel or other materials.

J. Dusty Material shall mean material that may cause ambient air quality standards for suspended particulates to be exceeded in the drop-off building during unloading or at the active area of the landfill during placement. Particulate standards are specified in the Federal Clean Air Act and amendments. Dusty materials include materials such as sheetrock dust, silicone dust, saw dust, fiberglass dust or any other loads that become airborne when unloaded.

K. Empty shall mean all waste has been removed that can be removed using the practices commonly employed to remove materials from the type container, e.g., pouring, pumping, or aspirating. For containers to be considered empty under this Rule they must be treated in the following manner:

1. Containers in excess of 25 gallons must have at least one end removed.

2. Containers that once held acutely hazardous waste must be triple rinsed with an appropriate solvent or cleaned by an equivalent method to be considered empty.

3. Containers that once held substances regulated under the Federal Insecticide, Fungicide, and Rodenticide Act must be emptied according to label instructions or triple rinsed with an appropriate solvent.

4. Cylinders of compressed gas are empty when the pressure in the container is equivalent to atmospheric pressure.

Recycling containers and cylinders are recommended in lieu of disposing at the landfill. Contact LCOSUEA for approved recycling facilities.

L. Extremely Hazardous Waste shall mean solid waste designated under OAC 3750-20-01 as extremely hazardous waste.

M. Friable Asbestos-Containing Material shall mean asbestos-containing material that, when dry, can be crumbled, pulverized, or reduced to powder by hand pressure; or, in the case of cement asbestos products, by the forces expected to act upon the cement asbestos product in the course of demolition, renovation, or disposal.

N. Hazardous Waste shall mean solid waste designated by ORC 3745-51-03, 40 CFR Part 261 and regulated as hazardous waste by the United States Environmental Protection Agency.

O. LCGHD shall mean the Lake County General Health District.

P. Household Hazardous Waste shall mean all waste that would meet the characteristics or criteria for designation as a Hazardous Waste under OAC except that it is generated at a residence and is exempt. It includes, but is not limited to oil based paints, cleaning agents, pesticides, solvents, motor fuels, crankcase oil, and chemicals used for home repair and remodeling, auto, boat and equipment maintenance, and hobby and recreational uses.

Q. Human Blood And Blood Products shall mean discarded waste human blood and blood components, and materials containing free flowing blood and blood products.

R. Improperly Handled Waste shall mean waste handled other than in accordance with Regulations LCGHD, OAC, this public rule, or any other applicable provision of local, state, or federal law.

S. LCOSUEA shall mean the Lake County Ohio State University Extension Agency

T. LCSWD shall mean the Lake County Solid Waste Division

U. Land Clearing Waste shall mean waste resulting from site clearing and includes, but is not limited to: stumps, tree trunks, brush, other vegetation and plant waste. Most vegetative land clearing waste can be composted.

V. Landfill shall mean the Lake County Solid Waste Facility.

W. Mixed Municipal Solid Waste shall mean waste consisting of solid waste generated by residences, stores, offices, and other generators of wastes that are not industrial, agricultural, or demolition wastes.

X. Official Of Lake County Solid Waste shall mean the Lake County Solid Waste Division Manager, or his/her designee.

Y. PCB Wastes Shall be as defined in 40 CFR 761.

Z. Regulated Refrigerant shall mean a Class I or Class II substance as listed in Title VI of the Federal Clean Air Act Amendments of 1990.

AA. Sharps Waste shall mean hypodermic needles, syringes with needles attached, IV tubing with needles attached, dental scalers, scalpel, blades, and lancets that have been removed from the original sterile package.

BB. Sludge shall mean a solid or semi-solid material consisting of settled solids combined with varying amounts of water and dissolved material that contains less than 40 percent solids by weight and is not a liquid waste.

CC. Treated Biomedical Waste shall mean biomedical waste that has undergone treatment consistent with the Ohio Administrative Code and is no longer considered capable of transmitting disease.

DD. Universal Waste shall mean any of the following dangerous wastes that are defined by Ohio State Dangerous Waste Regulations OAC as universal waste:

1. Batteries as described is OAC
2. Thermostats as described in OAC
3. Lamps as described in OAC. Universal waste lamps include, but are not limited to fluorescent, high intensity discharge (including mercury vapor, metal halide and high-pressure sodium) and neon lights
4. Any other dangerous wastes defined as universal waste by OAC

EE. White Goods shall mean major appliances, such as refrigerators, freezers, air conditioners, stoves, water heaters, washers and dryers.

FF. Yard Waste shall mean waste resulting from maintenance or removal of vegetation, including, but not limited to: brush, branches, leaves, flowers, shrubs and small trees.

GG. Waste Profiling Plan The LCSWD has established a formal process for determining whether wastes can be accepted at the Landfill. Through this waste clearance process, LCSWD gathers information on the waste in question. LCSWD may seek technical support in evaluating information obtained from waste generators. Other local, state and federal agencies are consulted when appropriate.

HH. Radioactive waste

1. Low Level Radioactive Wastes as defined by OAC 3701:1-38-01 (A)(94) are prohibited.
2. Radioactive Wastes are materials that set off the radiation alarm. The material and/or load may be rejected, investigated, or accepted upon confirmation of not being “Low Level Radioactive Waste.”

4.04. POLICIES

The Landfill is designed, constructed, and operated primarily for the handling and disposal of mixed municipal solid waste. Waste other than mixed municipal solid waste may be accepted with prior approval under the Waste Profiling Plan and when Landfill conditions allow LCSWD rules for acceptance of various waste types and items are described below.

A. Aerosol Cans – Aerosol cans or pressurized containers are not accepted in large quantities. Ten or fewer containers mixed in with household garbage are acceptable. **Aerosol cans may be recycled by depositing in curbside recycling bins or may be deposited at a household hazardous waste scheduled drop-off.**

B. Asbestos-Containing Waste – Asbestos-containing wastes are not accepted in any form at the Landfill. Contact OEPA or LCGHD for a list of approved disposal facilities.

C. Autoclave Wastes – Sterilization wastes are not accepted at the Landfill.

D. Batteries – Motor vehicle or lead-acid batteries are not accepted at the Landfill. These batteries can be returned to retail outlets when purchasing a new battery. **If not purchasing a new battery, call LCOSUEA for information on collection centers.**

E. Biomedical Waste – Biomedical waste that has not been treated in accordance with Health Department Solid Waste Regulations is not accepted at the Landfill. This shall include but is not limited to carcasses of animals exposed to pathogens in research, and the bedding and other waste from such animals.

F. Biosolids – See Sludge (Paragraph GG).

G. Catch Basin Residue And Vactor Waste – Catch basin residue and vactor waste must be dewatered to the extent practicable. These wastes are accepted at the Landfill on a case-by-case basis.

H. Computer Monitors – Computer monitors and computer components are not accepted at the landfill from commercial customers. **Call LCOSUEA for information on recycling computer monitors and computer components.**

I. Construction and Demolition Debris (CDD) (CD) – CDD waste is accepted at the Landfill only when delivered in a private vehicle with a load capacity of less than or equal to 1,500 pounds, or in mixed loads where the CDD waste makes up less than 10 percent of the load. Asphalt, concrete, masonry, rocks and other bulky items must be no greater than two feet by two feet by two feet in size and weigh less than 200 pounds.

J. Drum Containers – Drum containers and Fiberboard drums that are empty and open at one end may be disposed at the drop-off building located at the Landfill. Single drums that are empty and are generated by private individuals may be disposed at the drop-off building. All other drums are accepted only at the working face of the Landfill. Empty drums must have at least one end removed, or have been cut in half, or have been crushed (see Definitions – Paragraph M). Full drums are regulated according to their contents, and must be labeled non-hazardous and have tops removed prior to disposal. Drums containing any amount of free liquids will not be accepted at the Landfill. Call LCOSUEA for approved collection centers for disposal of drums containing free liquids.

K. Dusty Material – Dusty material is accepted at the drop-off building located at the Landfill in mixed loads if it is the lesser ingredient of the waste and does not create a nuisance or health hazard during unloading. The following conditions may be applied to dusty loads:

1. To the extent possible, dusty material shall be separated from other types of solid waste.

2. Loads of dusty material shall be containerized in plastic bags or wetted to the extent that they are no longer dusty materials as defined in this Public Rule.

3. Dusty loads may be required to unload only at the Landfill if dust cannot be adequately controlled. Loads delivered to the landfill must be accompanied by a Waste Profile approval and each load accompanied by manifest.

L. Explosives – Explosives including fireworks, detonators, blasting caps, gunpowder and ammunition are not accepted at the Landfill or any Lake County scheduled drop-off site. Contact the Lake County Sheriff or the OEPA for approved disposal centers.

M. Fluorescent Lights – Fluorescent light tubes and ballasts are accepted under the following conditions:

1. Fluorescent light tubes and other Universal Waste Lamps are not accepted from commercial customers. **Call LCOSUEA for information on lamp recycling.** Recycling is recommended for all commercial and residential lamps containing mercury, including low-mercury lamps that pass the federal TCLP standard.

2. Fluorescent light ballasts that indicate "contains no PCB's" may be disposed at the Landfill. **Ballasts free of any PCB's are recyclable. Contact LCOSUEA for a list of approved recycling centers.**

N. Food Products – Food products including beverages, which are outdated, off-specification or damaged and are in excess of one cubic foot solids and/or 5 gallons of liquids, must be approved in writing by LCSW prior to disposal. Waste approval is required if disposal at the landfill is needed.

O. Grease – Grease and fats from restaurants or other sources are not accepted at the Landfill and shall be disposed at approved rendering facilities. Contact the LCGHD or the OEPA for a list of approved haulers and rendering facilities.

P. Hazardous/Dangerous/PCB Waste – Hazardous/dangerous/PCB waste including waste from small quantity generators is not accepted at the Landfill.

Q. Household Hazardous Waste – LCSWD recommends that materials be used completely before disposing of empty containers. If materials cannot be used, they should be disposed at a dedicated household hazardous waste facility or collection. Petroleum products (motor oil, gasoline, diesel, etc.), oil-based paint, wood preservatives and banned or restricted-use pesticides are not accepted at the Landfill, even in household quantities. **Contact LCOSUEA for more information on available disposal facilities and scheduled Lake County Solid Waste District Household Hazardous Waste Drop-off events.**

R. Industrial Waste – Industrial waste may be accepted at the Landfill on a case-by-case basis.

S. Laboratory Waste – Not accepted in any form at the Landfill.

T. Latex Paint – Latex paint is not accepted for disposal in liquid form. Paint should be used up, given away, or dried to solid form prior to disposal. **Contact LCOSUEA for information on drying latex paint.**

U. Liquids – Non-hazardous waste domestic food and beverage liquids in small containers similar in size to those normally found in household waste are accepted.

V. Medical Waste – See Biomedical Waste (Paragraph E), and Sharps waste (Paragraph FF). Waste from medical facilities that is not biomedical waste (i.e., office waste, cafeteria waste, etc.) is accepted at the Landfill.

W. Motor Oil – See Household Hazardous Waste (Paragraph Q).

X. Motor Vehicles And Major Vehicle Parts – LCSW does not accept vehicles or vehicle parts for disposal. Major parts are defined as those with Vehicle Identification Numbers (VINs), such as engine blocks. Other vehicle parts, including bumpers, windshields and fenders are accepted at the Landfill. Vehicles and parts should be taken to salvage or wrecking yards.

Y. Odorous Waste – Loads of waste with highly offensive, irritating or noxious odors may be required to be mitigated in some manner or to be disposed directly at the Landfill. Waste approval is required prior to these materials being disposed of at the Landfill.

Z. Oil Filters – Used oil filters that have been drained for 24 hours or have been crushed are accepted at the Landfill. Another option is to cut used oil filters open and separate the oil, metal and paper components. **The used oil can be recycled, as can the metal.** Most hazardous waste treatment, storage, or disposal (TSD) facilities will also accept used oil filters**. Contact the LCOSUEA for available disposal centers.**

AA. Oversized Materials – All materials disposed at the Landfill must be four feet in length, or less. Oversized materials that cannot be broken down or cut into lengths of four feet or less may be accepted at the landfill with clearance from LCSWD.

BB. Pesticides – Banned or restricted-use pesticides are not accepted at the Landfill. **Contact LCOSUEA for information on approved collection centers.**

CC. Polystyrene Packaging Material – Polystyrene packaging material is accepted at the Landfill if bagged or otherwise treated to prevent littering or nuisance conditions during unloading, transport and disposal. This material may be required to be disposed directly at the Landfill if the waste cannot be adequately controlled at the drop-off building.

DD. Propane Tanks – Propane tanks, and tanks of any size with other compressed gases are not accepted. **Call LCOSUEA or local fire departments for disposal information.**

EE. Roofing Material – See Construction and Demolition Debris (Paragraph I). If roofing material contains asbestos, see Asbestos-Containing Waste (Paragraph B).

FF. Sharps Waste – Not accepted in any form at the Landfill.

GG. Sludge – Sludge from wastewater treatment plants, including biosolids, can be accepted at the Landfill on a case-by-case basis, consistent with the Landfill's Waste Profiling Plan Industrial sludges are handled as other industrial wastes.

HH. Soils – Soils are handled in the following manner: uncontaminated or clean soil in large quantities can be disposed at the Landfill on a case-by-case basis. Contaminated soil is not accepted at the landfill.

II. Tanks – Tanks, including home heating oil tanks no larger than 150 gallons, are accepted for disposal at the Landfill. Tanks must be empty and have one end open or be punctured with several holes prior to being transported to the Landfill.

JJ. Thermometers – Mercury-containing thermometers are not accepted. **Call LCOSUEA for information on recycling.**

KK. Tires – Tires are not accepted from commercial customers. Up to six passenger vehicle tires with rims removed per load are accepted from noncommercial customers. **Call LCOSUEA for information on tire recycling and processing. Contact the** LCGHD **for large quantity tire hauling and disposal.**

LL. Vactor Waste – See Catch Basin Residue (Paragraph G).

MM. White Goods – White goods are accepted at the Lake County drop-off building. **Call LCOSUEA for information on appliance recycling.**

NN. Yard Waste – Yard waste is not accepted at the Landfill. **Call LCOSUEA for information on yard waste composting options and/or for a list of facilities that accept yard wastes.**

OO. Other Waste – Other materials may be designated as conditionally accepted waste by a LCSW official due to special handling needs or specific waste properties. Pre-approval with LCSWD in accordance to the Waste Profiling Plan must be obtained prior to delivery.

PP. Denial Of Entry – LCSWD has the right to refuse any load.

QQ. Emergency – The Director of the Ohio EPA or his/her designee shall have the authority to declare an emergency authorizing the disposal of materials otherwise requiring conditions or clearance under this Rule, which could pose a threat to public health or the environment if not disposed immediately.

RR. Enforcement – The Director of the Ohio EPA or his/her designee is authorized and responsible to enforce or seek enforcement through the prosecutor's office of this Public Rule pursuant to the civil penalty provisions of Lake County Code.

4.05. PROCEDURES

Action by:	Action:
Generators/Transporters	1. Determine appropriate disposal facility for types of waste generated. Submit Waste Characterization for wastes requiring Waste Approval.
LCSW	2. Review Waste Characterization and provide approvals when appropriate.
LCSW	3. Check representative loads of waste arriving at the Landfill Deny access to and/or gather information sufficient to support enforcement action against persons with prohibited loads.

4.06. RESPONSIBILITIES

A. Generators and transporters of waste are responsible for ensuring that the waste is properly treated and handled, and that it is delivered to the appropriate solid waste facility.

B. LCSWD is responsible for ensuring that the Landfill is available for use by the residents of Lake County for municipal solid waste handling and disposal, and that this facility is constructed and operated in conformance with applicable federal, state and local regulations.

C. Generators and transporters of waste shall tarp all loads.

4.07. SPECIAL WASTE CLEARANCE

The Landfill accepts mixed municipal solid waste. Some types of waste are prohibited due to regulatory constraints, environmental or public health concerns or because the waste can be readily recycled or disposed more appropriately at a different type of facility. Other wastes are accepted at the Landfill only with prior approval through the Waste Profiling Plan and when certain conditions are met during or prior to disposal.

The LCSW has established a formal process for determining whether wastes can be accepted at County facilities. Through the waste clearance process, LCSW gathers information on the waste in question. When appropriate, the LCDU provides technical support in evaluating information obtained from waste generators. Other local, state and federal agencies are consulted when appropriate.

4.08. OPENING A SOLID WASTE DIVISION CHARGE ACCOUNT

LCSW offers charge accounts to qualified commercial haulers. See Exhibit B. Commercial Haulers shall be an ongoing, daily, local operator doing routine business with the Landfill to be eligible for a charge account.

Applicants demonstrating suitable credit history may be accepted for use of a charge account. Customers with an approved charge account shall resubmit credit application form once every five (5) years or upon a significant change in company structure for approval.

Un-renewed charge accounts shall be terminated.

4.09 FACILITY BUSINESS HOURS

The Landfill accepts waste during established business hours. Temporary departure from established business hours may be necessary due to extreme, unforeseen, and hazardous conditions. The LCSWD will notify customers when temporary changes to business hours are imposed.

EXHIBIT A

LOAD INSPECTION

COMPANY NAME: _____

TRUCK NUMBER: _____

TYPE OF WASTE:

[ ] Residential
[ ] Commercial
[ ] Mixed

TYPE OF VEHICLE:

[ ] Roll Off
[ ] Roll Off Packer
[ ] Front Loader Packer
[ ] Side Loader Packer
[ ] Rear Loader Packer
[ ] Dump Truck
[ ] Hand Load
[ ] Other

TYPE OF MATERIAL USED TO IDENTIFY LOCATION:

[ ] Home Address
[ ] Business Address
[ ] Packing Label
[ ] Ship to Address
[ ] Letter Heading
[ ] Other

List Address and Other Information Below:

_____
_____
_____
_____
_____

SIGNATURE OF INSPECTOR: _____

SIGNATURE OF SUPERVISOR: _____

DATE: _____ TIME: _____ A.M. P.M.

EXHIBIT B

APPLICATION FOR CREDIT

LAKE COUNTY DEPARTMENT OF UTILITIES **SOLID WASTE DIVISION**

2039 BLASE NEMETH ROAD, PAINESVILLE, OH 44077-4730 P. 440-350-2644 FAX 440-350-2910

COMPANY NAME: _____

BUSINESS ADDRESS: _____

_____

MAILING ADDRESS: _____

(IF DIFFERENT) _____

PHONE NO: _____ FAX NO: _____

TYPE OF BUSINESS: _____

YEAR BUSINESS STARTED: _____ YEARS AT PRESENT LOCATION: _____

TYPE OF ORGANIZATION: ____ PRIVATE CORPORATION ____ PARTNERSHIP

____ PUBLIC CORPORATION ____ INDIVIDUAL

COMPANY OFFICERS

NAME:	POSITION:	BUSINESS ADDRESS:	PHONE:

FEDERAL I.D. #: _____ PAYABLES CONTACT: _____

BANKING REFERENCE (INCLUDE ACCOUNT NUMBER AND CONTACT):

BANK: _____

_____

LOCAL TRADE REFERENCES:

1ST FIRM: _____

2ND FIRM: _____

3RD FIRM: _____

OTHER LANDFILLS UTILIZED (INCLUDE LANDFILL NAME, LOCATION, DATES USED):

1ST LANDFILL: _____

2ND LANDFILL: _____

**PLEASE STATE ESTIMATED TONNAGE: _____

I HEREBY AUTHORIZE LAKE COUNTY DEPARTMENT OF UTILITIES TO VERIFY OUR CREDIT.

SIGNATURE _____

TITLE _____ DATE _____

Section 5 – Pretreatment and Sewer Use

I. GENERAL PROVISIONS 5-1

5.01. PURPOSE AND POLICY 5-1

5.02. ADMINISTRATION 5-1

5.03. DEFINITIONS 5-5

II. GENERAL SEWER USE REQUIRMENTS 5-15

5.04. PROHIBITED DISCHARGE STANDARDS 5-15

A. General Prohibitions 5-15

B. Specific Prohibitions 5-15

5.05. OIL AND GREASE INTERCEPTORS 5-18

5.06. GENERAL PROVISIONS – FOG REQUIREMENTS 5-18

5.07. GENERAL LIMITATIONS, PROHIBITATIONS AND REQUIREMENTS ON FATS, OI, & GREASE (FOG) DISCHARGES 5-19

5.08. NON RESIDENTIAL PROPERTIES 5-21

5.09. SEWER SYSTEM OVERFLOWS (SSOs), ABATEMENT ORDERS AND COST RECOVERY (CLEANUP COSTS) 5-21

5.10. FACILITY REQUIREMENTS 5-22

5.11. GREASE TRAP REQUIREMENTS 5-23

5.12. GREASE TRAP MAINTENANCE REQUIREMENTS 5-23

5.13. MONITORING FACILITIES REQUIREMENTS 5-24

5.14. REQUIREMENTS FOR BEST MANAGEMENT PRACTICES 5-24

5.15. CATEGORICAL PRETREATMENT STANDARDS 5-25

5.16. LOCAL LIMITATIONS 5-26

5.17. STATE REQUIREMENTS 5-27

5.18. RIGHT OF REVISION 5-27

5.19. DILUTION PROHIBITION 5-27

III. PRETREATMENT OF WASTEWATER 5-27

5.20. PRETREATMENT FACILITIES 5-27

5.21. HIGH STRENGTH WASTEWATER 5-28

5.22. AUTHORITY FOR CONTROL OF WASTEWATER DISCHARGES 5-29

5.23. ACCIDENTAL DISCHARGE AND SLUG LOAD CONTROL 5-29

5.24. OPERATING UPSET 5-33

5.25. BYPASSES 5-33

IV. INDUSTRIAL WASTEWATER DISCHARGE PERMITS 5-34

5.26. DISCHARGE PERMIT REQUIREMENTS 5-34
5.27. PERMIT APPLICATION 5-35
5.28. PRETREATMENT PERMIT CONTENTS 5-36
5.29. PERMIT ISSUANCE PROCESS 5-38
A. Permit Duration 5-38
B. Public Notification 5-38
C. Permit Appeals 5-38
D. Permit Action 5-38
E. Permit Transfer 5-39
F. Permit Termination 5-39
G. Permit Re-issuance 5-40
H. Continuation Of Expired Permits 5-40
I. Special Agreements 5-40

V. COMPLIANCE MONITORING AND REPORTS 5-40

5.30. BASELINE MONITORING REPORTS 5-40
5.31. COMPLIANCE DATE REPORTS 5-41
5.32. PERIODIC COMPLIANCE REPORTS 5-42
5.33. NOTIFICATION OF CHANGED DISCHARGE 5-44
5.34. MONITORING FACILITIES 5-44
5.35. INSPECTION AND SAMPLING 5-44

VI. CONFIDENTIAL INFORMATION 5-45

VII. ENFORCEMENT 5-45

5.36. ADMINISTRATIVE ENFORCEMENT REMEDIES 5-45
A. Notification Of Violation 5-45
B. Consent Orders 5-45
C. Show Cause Hearing 5-45
D. Compliance Order 5-46
E. Cease And Desist Orders 5-46
F. Administrative Fines 5-46
G. Emergency Suspensions 5-46
H. Termination Of Permit 5-47
5.37. JUDICIAL REMEDIES 5-48
A. Injunctive Relief 5-48

B. Civil Penalties 5-48
C. Criminal Prosecution 5-48
D. Supplemental Enforcement Remedies 5-49

VIII. RECORDS RETENTION 5-49

SECTION 5 – PRETREATMENT AND SEWER USE

I. GENERAL PROVISIONS

5.01 PURPOSE AND POLICY

This resolution sets forth rules and regulations for all users of the Lake County Regional Sewer District wastewater collection and treatment facilities. It enables Lake County to comply with all applicable State and Federal Regulations, including the Clean Water Act and the General Pretreatment Regulations (40 CFR, part 403).

This resolution provides for the regulation of discharges into the Lake County Regional Sewer District wastewater treatment facilities through the issuance of wastewater discharge permits, and through enforcement of the general requirements for all users. This resolution authorizes monitoring and enforcement activities, requires user self monitoring reporting, establishes administrative review procedures, and provides for the establishment of fees for the equitable distribution of costs resulting from the programs established herein.

In accordance with the authority vested in Ohio Revised Code (ORC) 6111.032 (A) and (B), this resolution shall apply to the Lake County Regional Sewer District and to persons or entities outside of the Lake County Regional Sewer District's jurisdiction who are, by permit, contract, or agreement with the Lake County Regional Sewer District, users of the Lake County Regional Sewer District's wastewater treatment facilities.

5.02 ADMINISTRATION

A. The County may issue orders to any Industrial User to require compliance with any requirements under this resolution, including applicable pretreatment standards, other discharge limits, and reporting requirements.

B. It shall be unlawful to discharge wastewater to any natural outlet within the County of Lake, or in any area under the jurisdiction of said County, and/or to the wastewater treatment facilities except as authorized by the County in accordance with the provisions of this resolution.

C. All significant industrial users proposing to connect or to contribute to the wastewater treatment facilities are required to file a disclosure statement and receive approval from the County. The following information must be supplied on the disclosure statement:

1. Name, address and location.
2. SIC number according to the SIC manual, Bureau of the Budget, as amended.
3. Wastewater constituents and characteristics.

4. Time and duration of contribution.

5. Average daily and peak wastewater flow rates, including daily, monthly, and seasonal variations if any.

6. Site plans, floor plans, mechanical and plumbing plans, and details to show all sewers, sewer connections, and appurtenances by size, location, and evaluation.

7. Description of activities, facilities, and plant process on the premise including all materials, which are or could be discharged.

8. Where known, the nature and concentration of any pollutants in the discharge which are limited by any city, state or federal pretreatment standards, and a statement regarding whether or not the pretreatment standards are being met on a consistent basis and, if not, whether additional operation and maintenance (O&M) and /or additional pretreatment is required for the user to meet applicable pretreatment standards.

9. If additional pretreatment and/or O&M will be required to meet the pretreatment standards, the shortest schedule by which the user will provide such additional pretreatment shall be implemented. The completion date in this schedule shall not be later than the compliance date established for the applicable pretreatment standard.

   The LCDU shall order the following schedule to assure that pretreatment standards will be controlled:

   a. The schedule shall contain increments of progress in the form of dates for the commencement and completion of major events leading to the construction and operation of additional pretreatment required for the user to meet the applicable pretreatment standards (hiring an engineer, completing final plans, executing contacts for major components, commencing construction, completing construction, etc.

   b. No increment referred to in paragraph 9a shall exceed nine months.

   c. Not later than fourteen (14) days following each date in the schedule and the final date for compliance, the user shall submit a progress report to the industrial pretreatment coordinator including, as a minimum, whether or not it complied with the increment of progress to be met on such a date and, if not, the date which it expects to comply with the increment of progress, the reason for the delay, and the steps being taken by the user to return to the construction schedule established. If no event shall more than nine (9) months elapse between such progress reports to the industrial pretreatment coordinator.

10. Each product produced by type, amount, process or processes and rate of production.

11. Type and amount of raw materials processed (average and maximum per day.

12. Number of employees and hours of operation. Proposed or actual hours of pretreatment system in operation.

13. Any other information as may be deemed by the County to be necessary to evaluate the permit application.

14. The County will evaluate the data furnished by the user and may require additional information. After evaluation and acceptance of the data furnished, the County may authorize the industry to discharge subject to the terms and conditions of this resolution.

    a. Within ninety (90) days following the date for final compliance with applicable National Pretreatment Standards or as required by the County, existing industrial users and new source industrial users shall submit a report indicating the nature and concentration of all pollutants and the average and daily flows which are limited by pretreatment standards or requirements. If the user is not incompliance with applicable standards, the report must indicate the additional steps that are necessary to achieve compliance with applicable pretreatment standards.

    b. Any user classified as a significant industrial user shall submit a report, as defined in the County issued Administrative Order, indicating: reporting dates, required analysis, and the nature and concentration of pollutants in the industrial user's wastewater discharge.

    c. Any report submitted by an industrial user to Lake County including: baseline monitoring reports, compliance reports, self-monitoring reports, etc. must be signed by:
        1) A principal executive officer of at least the level of vice president, if the industrial user is a corporation.
        2) A general partnership or proprietor if the industrial user is a partnership or sole proprietorship respectively.

    d. All significant industrial discharges, including categorical industries, shall install suitable structure together with such necessary meters and other appurtenances in the building sewer to facilitate observation sampling and measurement of the waste if such is not available. Such a structure, when required, shall be accessibly and safely located, and shall be maintained by the owner so as to be safe and accessible at all times. Other industries than those mentioned above may be required by the County to install such a structure.

    e. The monitoring equipment shall be located and maintained on the industrial user's premises outside of the building. When such a location would be impractical or cause undue hardship on the user, the County may allow such a facility to be constructed in the

public right-of-way, with the approval of the public agency having the jurisdiction over such right-of-way.

f. When more than one user can discharge into a common sewer, the County may require installation of separate monitoring equipment for each user. When there is a significant difference in wastewater constituents and characteristics produced by difference operations of a single user, the County may require that separate monitoring facilities be installed for each separate discharge.

g. Whether constructed on public or private property, the monitoring facilities shall be constructed in accordance with the County requirements and all applicable construction standards and specifications.

h. Compliance considerations with respect to the probations and limitations stated in Chapter II may be made on the basis of either instantaneous grab samples or composite samples of wastewater. Composite samples may be taken over a twenty-four (24) hour period, or a longer or shorter period, as determined necessary by the County in order to meet the needs of specific circumstances.

i. Laboratory analysis of industrial wastewater samples shall be preformed in accordance with the General Pretreatment Regulations [40 CFR 403.12] requiring that all analysis performed in accordance with 40 CFR Part 136, “Guidelines Establishing Test Procedures for Analysis of Pollutants under the Clean Water Act” and amendments or with any other test procedures approved by the EPA. Analytical techniques for additional pollutants not contained in Part 136 must be performed by using validated analytical methods approved by the EPA [40 CFR 403.12(g)(4)].

j. Sampling of industrial wastewater for the purpose of compliance determination with the respect to the prohibition and limitations stated in Chapter II will be done at such intervals as designated by the County. All records pertinent to discharge to the community system in accordance with the provisions of this resolution.

k. Duly authorized employees of the County bearing proper credentials and identification shall be permitted to enter all properties for the purpose of inspection, observation, measurement, sampling, testing, and to review and copy records pertinent to discharge to the community system in accordance with the provisions of this resolution.

l. Information and data concerning a sewerage system user which is obtained pursuant to this resolution can be declared “confidential” by the user if the user is able to demonstrate to the satisfaction of the County that the release of such information, processor methods of production entitled to protection as trade secrets or classified as “confidential” shall not be transmitted to the general public unless written permission has been obtained by an authorized representative of the user. Information shall be transmitted to Governmental agencies in accordance with 40 CFR 403.14 and Section 6111.05 of the Ohio Revised code.

m. While performing the necessary work on private properties referred to the item k above, the County or duly authorized agents of the County shall observe all safety rules applicable to the premise.

n. All users subject to this section shall retain and reserve for no less than three (3) years, any records, books, documents, memoranda, reports, correspondence and any and all summaries thereof, relating to monitoring, sampling and chemical analysis made by or in behalf of a user in connection with its wastewater discharge. All records which pertain to matters which are subject administrative adjustments or any other enforcement or litigation activities brought by the County pursuant hereto shall be retained and reserved by the user until all enforcement activities have concluded and all periods of limitations with the respect to any and all appeals have expired.

5.03 DEFINITIONS

A. Act shall mean the Federal Water Pollution Control Act, also known as the Clean Water Act, as amended 33 U.S.C. 1251 et seq.

B. Additives shall mean enzymes, bacteria and /or other products designed to emulsify FOG and/or biologically treat FOG for grease remediation.

C. Authorized Representative Of the Industrial User shall mean

1. A responsible corporate officer, if the industrial user is a corporation.
   a. A president, secretary, treasurer, or vice-president of the corporation in charge of a principal business function, or any other person who performs similar policy or decision-making functions for the corporation; or
   b. The manager of one or more manufacturing, production, or operation facilities employing more than 250 persons or having a gross annual sales or expenditures exceeding $25 million dollars, if authority to sign documents has been assigned or delegated to the manager in accordance with corporate procedure.

2. A general partner or proprietor if the industrial user is a partnership or sole proprietorship, respectively

3. A principal executive officer or LCDU having responsibility for the overall operation of the discharging facility if the industrial user is a federal, state, or local government entity, or their agents.

4. A duly authorized representative of the individual designated above if such representative is responsible for the overall operation of the facilities from which the industrial discharge originates or has overall company responsibility for the environmental matters, and written authorization is submitted to the LCDU.

D. Biochemical Oxygen Demand (BOD) shall mean the quantity of oxygen utilized in the biochemical oxidation of organic matter under standard laboratory procedure in five (5) days at 20 degrees Celsius, expressed in milligrams per liter (mg/l).

E. Best Management-Practices (BMP's) shall mean methods determined by the Lake County Department of Utilities to be the most effective, practical means of preventing or reducing pollution, including but not limited to: substitution of materials: reformulation or redesign of products; modification of equipment, facilities, technology, processes, and procedures; and improvement in management, inventory control, materials handling or general operation of a facility.

F. Board shall mean the Board of Commissioners of Lake County, Ohio or its administrative agency, the Lake County Department of Utilities.

G. Building Drain shall mean that part of the lowest horizontal piping of a drainage system that receives the discharge from soil, waste, and other drainage pipes inside the walls of the building and conveys it to the building sewer, beginning three (3) feet outside the inner face of the building wall.

H. Building Sewer shall mean the extension from the building drain to the public sewer or other place of disposal.

I. Bypass shall mean the intentional diversion of waste streams from any portion of an industrial user's treatment facility.

J. Carbonaceous Biochemical Oxygen Demand (CBOD) shall mean the quantity of oxygen utilized for the biochemical degradation of organic matter under standard laboratory procedures in five (5) days in the presence of a nitrification inhibitor, expressed in milligrams per liter (mg/l).

K. Categorical Pretreatment Standard shall mean any regulation promulgated by United States Environmental Agency (USEPA) in accordance with Section 307 (b) and (c) of the Act which applies to specific industrial categories, and which specifies or limits quantities or concentrations of pollutants or pollutant properties which may be discharges or introduced to the Publicly Owned Treatment Works (POTW) by specific industrial users. This term shall also include Ohio categorical pretreatment standards.

L. CFR shall mean the Code of Federal Regulations.

M. Chemical Oxygen Demand shall mean the quantity of oxygen utilized in chemical oxidation of organic matter under standard laboratory procedures expressed in milligrams per liter (mg/l).

N. Composite Sample shall mean a collection of individual samples obtained from one location (discharger) at selected intervals based on an increment of either flow or time. The resulting mixture forms a representative sample of the waste stream discharged during the sample period.

O. County shall mean Lake County, Ohio, acting through its duly authorized officials, employees and/or agents.

P. Combined Sewer shall mean a sewer intended to receive both wastewater and storm or surface water.

Q. Commercial User shall mean any user of the sewage systems not specifically categorized as residential or industrial, and generally classified in the Standard Industrial Classification (SIC) manual in Division F – Wholesale Trade; Division G – Retail Trade; Division H – Finance, Insurance, and Real Estate; portions of Division I – Services; and Division J – Public Administration.

R. Director shall mean the Director of Utilities.

S. Discharger shall mean any person who discharges or causes a discharge of wastewater directly or indirectly to a public sewer. Discharger shall mean the same as User.

T. Domestic Sewage shall mean the liquid and water carried wastes discharged from sanitary plumbing facilities and characterized by a composition typical of the water emanating from an average residential connection.

U. Fats, Oils, and Grease (FOG) shall mean any substance such as vegetable or animal product that is used in, or is a byproduct of, the cooking or food preparation process, and that turns or may turn viscous or solidifies with a change in temperature or other conditions.

V. FOG Wastewater Discharge Permit shall mean a permit issued by BCDES subjecting the permittee to the requirements and conditions established by BCDES authorizing the permittee or discharger to discharge wastewater into County facilities or into sewer facilities which ultimately discharge into a County facility.

W. Food Service Establishment (FSE) shall mean any permanent facility within the boundaries of BCDES service area, which prepares and/or packages food or beverages for sale or consumption, on or off-site, which has any processor device that uses or produces FOG. Excluding private residences, FSE'S includes, but are not limited to: food courts, food manufacturers, food packagers, food processors, restaurants, grocery stores, bakeries, lounges, hospitals, hotels, nursing homes, churches, and schools.

X. Food Grinder shall mean any device installed in the plumbing or sewage system for the purpose of grinding food waste or food preparation by-products for the purpose of disposing of it in the sewer system.

Y. Garbage shall mean solid waste from the domestic and commercial preparation, cooking, and dispensing of food, and from the commercial handling, storage, and sale of produce.

Z. Grease Control Device shall mean any grease interceptor, grease trap or other mechanism, device or process, which attaches to , or is applied to, wastewater plumbing fixtures and lines, the purpose of which is to trap or collect or treat FOG prior to it being discharged into the sewer system. "Grease control device" may also include any other proven method to reduce FOG subject to the approval of the District.

AA. Grease Interceptor (GI) shall mean a device, usually located underground and outside, between a Food Service Establishment and the connection to the sewer system, designed

to collect, contain, and remove food wastes and grease from the process waste stream while allowing the remaining wastewater to be discharged to the collection system by gravity. Generally, a device is considered a grease interceptor if it has a capacity greater than 50 pounds. To be effective, these devices must be cleaned, maintained, and have FOG removed and disposed of in a proper manner on regular intervals as defined by these Rules.

BB. Grease Trap shall mean grease control device, usually located inside the building and under a sink of a FSE, designed to collect, contain, and remove food wastes and grease from the process waste stream while allowing the remaining wastewater to be discharged to the collection system by gravity. Generally, a device is considered a grease trap if it has capacity of 50 pounds or less. To be effective, these devices must be cleaned, maintained, and have the FOG removed and disposed of in a proper manner at regular intervals as defined by these rules.

CC. Grab Sample shall mean a sample taken from a waste stream at a single point in time without regard to the flow in the waste stream and without consideration of time, as required under 40 CFR 136, to monitor for FOG content in wastewater effluent.

DD. Hot Spots shall mean areas in sewer collection system that have experienced sanitary sewer overflows or that must be cleaned or maintained frequently to avoid blockages or overflows of sewer system.

EE. Indirect Discharge shall mean the discharge or the introduction of pollutants from a non-domestic source regulated under Section 307(b), (c), or (d) of the Act, into a POTW.

FF. Industrial User shall mean a source of indirect discharge.

GG. Industrial Waste shall mean the wastewater from industrial processes, trade, or business as distinct from domestic or sanitary wastes.

HH. Industrial Pretreatment Coordinator shall mean the person in daily charge of the Industrial Pretreatment Program as assigned by the LCDU.

II. Inflow shall mean water entering a sewer system through a direct stormwater/runoff connection to the sanitary sewer, which may cause an almost immediate increase in wastewater flows.

JJ. Infiltration shall mean water entering a sewer system, including sewer service connections, from the ground through such means as defective pipes, pipe joints, connections, or manhole walls.

KK. Interceptor shall mean a grease interceptor.

LL. Interference shall mean a discharge which, alone or in conjunction with a discharge or discharges from other sources, both:

1. Inhibits or disrupts the POTW, its treatment processes or operations, or its sludge processes, use or disposal;

2. Therefore is a cause of a violation of any requirement of the POTW's NPDES permit (including an increase in the magnitude or duration of a violation) or of the prevention of sewage sludge use or disposal.

MM. Maintenance Costs shall mean those costs, including labor, materials, supplies, equipment, accessories, and appurtenances required to maintain the capacity and performance of the wastewater facilities during the design or actual life of such facilities.

NN. Limited Food Preparation Establishment (L-FPE) - A Limited Food Preparation Establishment is generally engaged only in reheating, hot holding or assembly of ready to eat food products and as a result, wastewater discharges contain insignificant amounts of FOG. A Limited Food Preparation Establishment will generally be classified as Risk Level I or II food service operation per Ohio Revised Code Chapter 3701.

OO. Manifest shall mean that receipt or form which is retained by the generator of wastes for disposing recyclable wastes or liquid wastes as required by Lake County Sanitary Engineer. For proposes related to the FOG Control Rule, manifest generally means either: (1) the receipt from disposal of FOG waste from Grease Interceptor, or (2) BCDES Grease Interceptor Manifest Form.

PP. May is permissive; Shall is mandatory.

QQ. Natural Outlet shall mean any outlet into a watercourse, pond, ditch, lake, or other body of surface or groundwater.

RR. New Source shall mean any building, structure, facility, or installation from which there is or may be a discharge of pollutants, the construction of which commenced after the publication of proposed pretreatment standards under Section 307 (c) of the Act which will be applicable to such source if such standards are thereafter promulgated in accordance with that section, provided that:

1. The building, structure, facility, or installation is constructed at a site at which no other source is located; or

2. The building, structure, facility, or installation totally replaces the process or production equipment that causes the discharge of pollutants at an existing source; or

3. The production or wastewater generating processes of the building, structure, facility, or installation is substantially independent of an existing source at the same site.

4. Construction on a site at which an existing source is located results in a modification rather than a new source if the construction does not create a new building, structure, facility, or installation meeting new source criteria but otherwise alters, replaces, or adds to an existing process or production equipment.

SS. NPDES permit shall mean the National Pollutant Discharge Elimination System permit issued pursuant to Section 402 of the Act.

TT. Non-Polar Oil And Grease shall mean petroleum or mineral hydrocarbon based oil and grease.

UU. Permittee shall mean a person who has received a permit to discharge wastewater into the County's sewer facilities subject to the requirements and conditions established by the County.

VV. Public Agency shall mean The State of Ohio and/or any city, county, special district, other local governmental authority or public body of or within this State.

WW. Polar Oil And Grease shall mean animal and vegetable based oil and grease.

XX. Operating Cost shall mean those costs, including labor, materials, supplies, equipment, accessories, and appurtenances required to operate the wastewater facilities at the level of performance required by the NPDES permit.

YY. Normal Strength Waste shall mean wastewater from domestic and sanitary conveniences which, when analyzed, shows by weight a daily average concentration of not more than 250 parts per million of suspended solids, nor more than 250 parts per million of BOD, nor more than 10 parts per million phosphorus.

ZZ. Pass Through shall mean a discharge which exits the POTW into waters of the state in quantities or concentrations which alone or in conjunction with a discharge or discharges from other sources, is a cause of a violation of any requirement of the NPDES permit, including an increase in the magnitude or duration of a violation.

AAA. Person shall mean any individual, firm, company, association, society, municipal or private corporation, group, partnership, co-partnership, joint stock company, trust, estate, institution, enterprise, governmental agency, the state of Ohio, the United States of America, or other legal entity, or their legal representative, agents, or assigns. The masculine gender shall include the feminine, the singular shall include the plural where indicated by context.

BBB. pH shall mean the logarithm (base 10) of the reciprocal of the hydrogen ion concentration. The concentration is the weight of hydrogen ions, in grams, per liter of solution. Neutral water, for example, has a pH value of 7 and a hydrogen ion concentration of 10 (-7).

CCC. Phosphorus shall mean the total phosphorus content of a sample as expressed in milligrams per liter (mg/l), including all the orthophosphates and condensed phosphates, both soluble and insoluble, and organic and inorganic species, and referred to as total phosphorus.

DDD. Pollutant shall mean dredged spoil, solid waste, incinerator residue, wastewater, garbage, wastewater sludge, munitions, chemical wastes, biological materials, radioactive materials, heat, wrecked or discarded equipment, rock, sand, cellar dirt, industrial, municipal, and agricultural waste and certain characteristics of wastewater (e.g., pH, temperature, TSS, turbidity, color, BOD, COD, toxicity, or odor).

EEE. POTW (Publicly Owned Treatment Works) shall mean any wastewater facilities owned and operated by the Board and the sewers and conveyance appurtenances discharging thereto. For this resolution, POTW also includes any sewers that convey wastewaters to a wastewater treatment facility from persons outside the county's jurisdiction who are, by contract or agreement with the County users of the County's wastewater treatment facilities.

FFF. Pretreatment shall mean facilities used in the reduction in the amount of pollutants, the elimination of pollutants, or the alteration of the nature of pollutant properties in wastewater to a less harmful state prior to discharging, or otherwise introducing pollutants to the POTW. The reduction or alteration can be obtained by physical, chemical, or biological processes, process changes, or other means, except dilution as prohibited by 40 CFR Section 403.6 (d).

GGG. Pretreatment Requirements shall mean any substantive or procedural requirement related to pretreatment, other than a pretreatment standard imposed on an industrial user.

HHH. Pretreatment Standard shall mean a discharge limit related to pretreatment that is imposed on an industrial user, including categorical pretreatment standards, prohibitive discharge limits, local limitations, and any enforceable schedule designed to achieve compliance with such limit.

III. Public Sewer shall mean a common sewer in which all owners of abutting properties have equal rights and is controlled by a governmental agency or public utility.

JJJ. Regulatory Agencies shall mean those agencies having regulatory jurisdiction over operations of the County, including but not limited to:

1. Lake County Department of Utilities.
2. United States Environmental Protection Agency, Region V, Chicago, Illinois and Washington D.C. (EPA).
3. Ohio Environmental Protection Agency , Columbus, (OEPA), and Ohio Environmental Protection Agency, Southwest District Office, Dayton, Ohio (OEPA)
4. Lake County General Health District, Painesville, Ohio
5. Any other governing agency having jurisdiction

KKK. Residential User shall mean any user discharging domestic wastes from buildings or premises that are used as permanent places for human occupancy such as single-family dwellings, row houses, townhouses, mobile homes, garden and standard apartments, and high rise apartments. Transient lodging, considered commercial in nature, is not included.

LLL. Sanitary Sewer shall mean a sewer that carries liquid and water-carried wastes from residences, non-residential buildings, industrial plants, and institutions and to which ground, storm and surface waters are not admitted intentionally.

MMM. Sanitary Sewer Overflow (SSO) Shall mean an overflow of untreated wastewater from the sanitary sewer system into the environment.

NNN. Sample Point shall mean a location approved by Lake County Sanitary Engineer, from which wastewater can be collected that is representative in content and consistency of the entire flow of wastewater being sampled.

OOO. Sampling Facilities shall mean structure(s) provided at the user's expenses for Lake County Sanitary Engineer, or user to measure and record wastewater constituent mass and concentrations, to collect representative sample, or to provide access to plug or terminate the discharge.

PPP. Septage shall mean any sewage from a residential septic system.

QQQ. Sewage shall mean the combination of the liquid and water carried wastes from residences, non-residential buildings, industrial plants, and institutions, including polluted cooling water.

RRR. Sewer Facilities or System shall mean any property belonging to County used for collecting, conveying, pumping, treating and disposing of wastewater and sludge.

SSS. Sewer Lateral shall mean a building sewer as defined in the latest edition of the Uniform Plumbing Code. It is the wastewater connection between the building's wastewater facilities and a public sewer system.

TTT. Significant Industrial User shall mean:

1. All industrial users subject to categorical pretreatment standards; or

2. Any industrial user that discharges an average of 25,000 gallons per day or more of process wastewater to the POTW (excluding sanitary, non-contact cooling and boiler blow-down wastewater);

3. Any user that contributes a process waste stream which makes up five (5) percent or more of the average dry weather hydraulic or organic capacity of the POTW; or

4. Any user that is designated as such by the Lake County Regional Sewer District on the basis that the industrial user has a reasonable potential for adversely affecting the POTW's operation or for violating any pretreatment standard or requirement.

5. Upon finding that a user meeting the criteria in paragraph (b) of this section has no reasonable potential for adversely affecting the POTW's operation or for violating any pretreatment standard or requirement, the Lake County Regional Sewer District may at any time, on its own initiative or in response to a petition received from an industrial user and in accordance with procedures in 40 CFR 403.8(f) (6), determine such industrial user is not a significant user.

UUU. Significant Noncompliance shall mean industrial user violations which meet one or more of the following criteria:

1. of wastewater discharge limits, defined here as those in which 66 percent or more of all the measurements taken during a six month period exceed (by any magnitude) the daily maximum or the average for the same pollutant parameter.

2. Technical review criteria (TRC) violations, defined here as those in which 33 percent or more of all the measurements for each pollutant parameter taken in a six month period equal or exceed the product of the daily maximum limit or the average limit multiplied by the applicable TRC (TRC=1.4 for BOD, TSS, O/G and 1.2 for all other pollutants except pH.)

3. Any violation of a pretreatment effluent limit (daily maximum or longer term average) that the Lake County Regional Sewer District determines has caused, alone or in combination with other discharges whether from the same user or others, interference or pass through (including endangering the health of POTW personnel or the general public).

4. Any discharge of a pollutant that has caused imminent endangerment to human health, welfare, or to the environment or has resulted in the POTW's exercise of its emergency authority under Chapter VII of this resolution to halt or prevent such a discharge.

5. Failure to meet, within 90 days after the schedule date, a compliance schedule milestone contained in a wastewater discharge permit or enforcement order for starting construction, completing construction, or attaining final compliance.

6. Failure to provide, within 30 days after the due date, required reports such as base-line monitoring reports, 90 day compliance reports, periodic self-monitoring reports, and reports on compliance with compliance schedules.

7. Failure to accurately report noncompliance.

8. Any other violation or group of violations that the Lake County Regional Sewer District determines will adversely affect the operation or implementation of the local Industrial Pretreatment Program.

VVV. Sanitary Engineer shall mean the Lake County Department of Utilities Sanitary Engineer.

WWW. Sewer Charge shall mean a Metered Service Charge for the services of the Lake County wastewater treatment system or a Minimum Charge, whichever is greater. See Section 7, Fee Schedule for current metered service charges.

XXX. Sludge shall mean any solid, semi-solid or liquid decant, subnate or supernatant from a manufacturing process, utility service, or pretreatment facility.

YYY. Storm Water shall mean any flow occurring during or following any form of natural precipitation, and resulting from such precipitation, including snowmelt.

ZZZ. Slug Load shall mean any discharge at a flow rate or concentration that could cause a violation of the prohibited discharge standards in Chapter II of the resolution.

AAAA. Surcharge shall mean a fee, in addition to the normal user charge, collected to recover costs to treat higher than normal domestic sewage strength wastes.

BBBB. Standard Industrial Classification (SIC) Code shall mean a classification pursuant to the "Standard Industrial Classification Manual" issued by the United States Office of Management and Budget.

CCCC. Suspended Solids shall mean total suspended matter that either floats on the surface of, or is in suspension in, water, wastewater, or other liquids, and that is removable by laboratory filtering and referred to as non-filterable residue, expressed in milligrams per liter (mg/l) by weight.

DDDD. Toxic Pollutants shall mean any pollutant or combination of pollutants listed as toxic under Section 307 (a) of the Act as well as any other known potential substances capable of producing toxic effects.

EEEE. Trunk Sewer shall mean a sewer that conveys wastewater from a group of homes, subdivision, community, etc., to the wastewater treatment facility.

FFFF. Twenty-five percent (25%) Rule shall mean the requirement for grease interceptors to be maintained such that the combined FOG and solid accumulation does not exceed 25% of the design hydraulic depth of the grease interceptor. This is to ensure that the minimum hydraulic retention time and required available hydraulic volume is maintained to effectively intercept and retain FOG prior to discharge to the sewer system.

GGGG. Unpolluted Water shall mean water of quality equal to or better than the effluent criteria in effect or water that would not cause violation of receiving water quality standards and would not be benefited by discharge to the sanitary sewers and wastewater treatment facilities provided.

HHHH. Upset shall mean an exceptional incident in which a user unintentionally and temporarily is in a state of noncompliance with this resolution or their wastewater discharge permit or order issued hereunder due to factors beyond the reasonable control of the discharger, and excluding noncompliance to the extent caused by operational error, improperly designed treatment facilities, inadequate treatment facilities, lack of preventive maintenance, or careless or improper operation thereof.

IIII. U.S. EPA shall mean the United States Environmental Protection Agency, or where appropriate, the Administrator or fully authorized official of that agency.

JJJJ. User shall mean any person who discharges, causes, or permits the discharge of wastewater into the wastewater treatment system

KKKK. Waste Minimization Practices shall mean plans or programs intended to reduce or eliminate discharge to the sewer system or to conserve water, including, but not limited to: product substitutions, housekeeping practices, inventory control, employee education, and other steps to minimize wastewater produced.

LLLL. Waste Hauler shall mean any person carrying on or engaging in vehicular transport of waste as part of, or incidental to, any business for that purpose.

MMMM. Wastewater shall mean the spent water of the community discharged to the POTW or the liquid and water carried waste from dwellings, non-residential buildings, industrial facilities, and institutions, together with ground water, surface water, or storm water that may be present, whether treated or untreated, which is discharged or permitted to enter the wastewater treatment systems.

NNNN. Wastewater Collection System shall mean the entire system of collection sewers, trunk sewers, and interceptor sewers and all appurtenances provided to collect and transport wastewater to the wastewater treatment plant.

OOOO. Wastewater Treatment System shall mean the structures, equipment, and process required to collect, transport and treat domestic and industrial wastes and dispose of the effluent and accumulated residual solids and shall be synonymous with sewage system.

II. GENERAL SEWER USE REQUIREMENTS

5.04 PROHIBITED DISCHARGE STANDARDS

A. General Prohibitions – No user shall introduce or cause to be introduced into the POTW any pollutant or wastewater that causes pass through or interference as defined in Paragraph 5.03.FF and 5.03.V respectively. These general prohibitions apply to all users of the POTW whether or not they are subject to categorical pretreatment standards.

1. Storm water and all other unpolluted drainage shall be discharged to storm sewers, roadside ditches, and culverts or to a natural outlet approved by the appropriate regulatory authority. Unpolluted industrial cooling water or process water may be discharged to a storm sewer or a natural outlet upon approval of the Ohio Environmental Protection Agency (Ohio EPA).

B. Specific Prohibitions – No person(s) shall discharge or cause to be discharged, directly or indirectly, any of the following described waters or wastes to any public sewer or wastewater facilities of the Lake County Regional Sewer District:

1. Any liquids, solids, or gases which by reason of their nature or quantity are, or may be, sufficient either alone or by interaction to cause fire or explosion or be injurious in any other way to the operation of the POTW, including but not limited to materials such as gasoline, benzene, naphtha, fuel oil, and in no case wastestreams with a closed cup flashpoint of less than 140 degrees Fahrenheit or 60 degrees Celsius using test methods specified in 40 CFR 261.21.

2. Any waters or wastes having a pH lower than 5.5 or higher than 12.0 or having any other corrosive property capable of causing damage or hazard to structures, equipment, or personnel of the wastewater treatment system.

3. Solid or viscous substances in quantities or of such size capable of causing obstruction to the flow of sewers or other interference with the proper operation of the wastewater treatment system. Such as, but not limited to, ashes, bones, cinders, sand, mud, straw, shavings, metal, glass, rags, feathers, tar, plastic, wood, ungrounded garbage, whole blood, paunch manure, hair and fleshings, entrails and paper dishes, cups, milk containers, etc., either whole or ground by garbage grinders.

4. Any wastewater having a temperature higher than 66 degrees Celsius (150 degrees F) at the point of sewer connection or having a temperature which will inhibit biological activity in the POTW resulting in interference. In no case, wastewater causing the temperature at the POTW to exceed 40 degrees Celsius (104 degrees F).

5. Any noxious or malodorous gas or substance which, either singly or by interaction with other wastes, is capable of creating a public nuisance or hazard to life or preventing entry into the sewers for their maintenance or repair.

6. Any water or wastes containing emulsified non-polar oil and grease as defined in Paragraph 5.03.BB and grease exceeding, on analysis, an average of 50 milligrams per liter of oil and grease per liter determined as soluble matter, the total of either, or in amounts that cause pass through or interference at the POTW.

7. Any water or wastes containing emulsified polar oil and grease as defined in Paragraph 5.03.CC and grease exceeding, on analysis, an average of 100 milligrams of oil and grease per liter determined as soluble matter, the total of either, or in amounts that cause pass through or interference at the POTW.

8. Any water or wastes containing free floating polar or non-polar oil and grease.

9. Any garbage that has not been properly shredded to a degree that all particles will be carried freely under the flow conditions of the sewer and with no particle greater than one-half inch in any dimension.

10. Any water or wastes containing toxic pollutants, as defined in Paragraph 5.03.CCC, in sufficient quantity, either singly or by interaction with other wastes, to injure or interfere with any wastewater treatment plant process, to constitute a hazard to humans or animals, to create a public nuisance, to exceed the limitations set forth in the pretreatment standards, or to create any hazard in receiving waters of the POTW.

11. Any waters or wastes containing substances which result in the presence of toxic gases, vapors, or fumes within the POTW in a quantity that may cause acute worker health and safety problems.

12. Any substance in amounts that will alter the natural color or odor of the receiving waters, treatment facility or collection system to such a degree as to create a nuisance.

13. Any radioactive wastes or isotopes of such a half-life or concentration as may exceed limits in compliance with applicable state or federal

regulations. Wastewater having a concentration of gross alpha/beta in excess of 1x10-7th power micro curies per milliliter is prohibited.

14. Any substance, which will pass through the POTW in quantities or concentrations that will cause the POTW to violate its NPDES permit or the receiving water quality standards.

15. Any waters or wastes at a quantity of flow or concentration, which constitutes a slug load as defined in Paragraph 5.03.YY.

16. Any substance which may cause the POTW's effluent or any other product of the wastewater treatment system such as residues, sludge, or scums to be unsuitable for reclamation and reuse or to interfere with the reclamation process. In no case shall a substance discharged to the POTW cause the POTW to be in non-compliance with the sludge use or disposal criteria, guidelines, or regulations affecting sludge use or disposal developed pursuant to the Solid Waste Disposal Act (including Title II, RCRA), the Clean Air Act, the Toxic Substance Control Act, 40 CFR 503 Sludge Regulations, or state criteria applicable to the sludge management method being used.

17. Any hazardous wastes (as defined in Section 1004 of the Resource Conservation and Recovery Act) discharged to the headworks of the POTW by truck, rail, or pipeline, which is dedicated to only the discharge of hazardous wastes.

18. Any trucked or hauled septage (septic tank wastes, cesspool wastes, portable toilet wastes) removed from non-residential or industrial facilities (Trucked or hauled septage removed from residential septic systems is acceptable by permit issued to licensed septage hauling companies). Any trucked or hauled non-hazardous industrial waste is prohibited. Removal of manhole covers, or other access to the sewer system for the purpose of discharging wastes at times and/or locations other than those designated by Lake County, or without the expressed consent of Lake County, shall be subject to enforcement action as described in Chapter VII of this resolution .

19. Any water or wastes that contain mercury above the detection of 0.5 ug/l (EPA method 245.1 or 245.2) is prohibited.

20. It shall be unlawful to discharge into any natural outlet within Lake County, or in any area under the jurisdiction of Lake County, any wastewater or other pollutant.

21. It shall be unlawful to discharge into the building sanitary sewer the surface water, which collects in basements or foundation excavations.

22. The owner(s) of all houses, building, or properties used for human occupancy, employment, recreation, or other purposes, situated within Lake County and abutting on any street, alley, or right of way in which there is now located a public sanitary sewer of the county, is hereby required at the owner's expense to install suitable toilet facilities therein, and to connect such facilities directly to the proper public sewer in accordance with the Lake County General Health District Rules and Regulations.

23. No person, firm, or corporation shall be permitted to connect to or discharge wastewater to the Lake County wastewater treatment system unless it has been determined by Lake County that there is sufficient capacity in the system to collect, convey, and treat the proposed wastewater discharge.

The LCDU may set additional or more stringent prohibitions than the above-specified prohibitions if, in the opinion of the LCDU more severe prohibitions are necessary to protect the wastewater treatment system; to prevent causing an adverse effect on the receiving stream; or to protect the health and welfare of the wastewater treatment system employees or the general public. The above list is subject to revision, as required to meet water quality and industrial pretreatment standards imposed by the state or federal agencies.

5.05 OIL AND GREASE INTERCEPTORS

Interceptors shall be provided for oil and grease, and inorganic material such as sand, grit, etc. when in the opinion of the LCDU they are necessary for the proper handling of liquid wastes containing oil and grease as described in Paragraph 5.04.B.7, 5.04.B.8 and 5.04.B.9 of this resolution. All interceptors shall be of a type and capacity approved by Lake County and shall be located in an area readily accessible for cleaning and inspection. A “Guidance Document for Sizing and Installation of Grease Interceptors” is available in Section 1, Exhibit Q of these Rules and Regulations.

Oil and grease interceptors shall be constructed of impervious materials capable of withstanding extreme temperature changes. They shall be of substantial construction, watertight, and equipped with gas and watertight removable covers.

Where installed, all oil and grease and sand interceptors shall be maintained by the owner, at the owner’s expense, in continuously efficient operation at all times. The owner shall provide for the proper removal and disposal of the captured material and shall maintain disposal records for a period of at least three (3) years. The disposal records shall contain the date and means of disposal. The records are subject to review by an authorized agent of Lake County. The County reserves the right, in its sole discretion, to require a user to periodically submit affidavits from registered contractor’s evidence in the proper removal and disposal of captured material.

5.06 GENERAL PROVISIONS- FOG REQUIREMENTS

A. The purpose of this Rule is to facilitate the maximum beneficial public use of the County’s sewer services and facilities while preventing blockage of the sewer lines resulting from discharges of fats, oils, and grease (FOG) to the sewer facilities, and to specify appropriate FOG discharge requirements for Food Service Establishments (FSE’s).

B. This Rule establishes quantity and quality standards on all wastewater and/or waste discharges (FOG), which may alone or collectively cause or contribute to FOG accumulation in the sewer facilities causing or potentially causing or contributing to the occurrence of sewer backups and/or sanitary sewer overflows (SSO’s).

C. The specific objectives of this Rule are:

1. To prevent the introduction of wastewaters containing fats, oils, and grease in amount which may cause stoppages or obstruction of flow, or in any other way prevent or inhibit operation of a Publicly-Owned Treatment Works, (POTW), including the sanitary sewer collection system and/or treatment plant;

2. To prevent the introduction of pollutants into a POTW, which may be incompatible with the POTW;

3. To protect the water quality of streams, creeks and other waterways traversing the County;

4. To enable the LCDU Industrial Pretreatment Department to comply with its' National Pollutant Discharge Elimination System (NPDES) permit conditions, sludge disposal conditions, sludge use and disposal requirements, and any other Federal or State laws to which the POTW is subject; and

5. To protect the environment and the health, safety and welfare of the public and the POTW worker by regulating the pretreatment, transport and disposal of liquid wastes.

D. This Rule enables Lake County to protect public health in conformity with all applicable Local, State, and Federal laws relating thereto, including but not limited to the Clean Water Act (33) United States Code (1251 et seq.) and the General Pretreatment Regulations (40 Code of Federal Regulations Part 403). This Rule shall be interpreted in accordance with the definitions set forth in Section 5.03. The provisions of the Rule shall apply to the direct or indirect discharge of all wastewater or waste containing FOG carried to the sewer facilities of the County.

E. In accordance with Ohio Revised Code Section 6111.032 (A) and (B), this rule shall apply to all Food Service Establishment (FSE) users of the Lake County wastewater treatment and collection system and to persons or entities outside LCDU's jurisdiction who are, by permit, contract, or agreement with Lake County users of the Lake County wastewater facilities or collection system.

5.07 GENERAL LIMITATIONS, PROHIBITIONS, AND REQUIREMENTS ON FATS,OIL, & GREASE (FOG) DISCHARGES

A. FOG Discharge Requirement - No Food Service Establishment (FSE) shall discharge or cause to be discharged into the sewer system FOG that exceeds a concentration level of 100 mg/l (Polar O/G) as adopted by the Board or that may accumulate and/or cause or contribute to blockages in the sewer system or at the sewer system lateral which connects the Food Service Establishment to the sewer system.

B. Prohibitions - The following prohibitions shall apply to all Food Service Establishments:

1. discharge of wastes through food grinders and/or garbage disposal-type devices to sewer lines intended for grease interceptor/grease trap service is prohibited;

2. discharge of wastes that do not require separation (i.e. urinals, toilets, wash basins, etc.) to sewer lines intended for grease interceptor/grease trap service is prohibited;
3. introduction of any additives into a Food Service Establishment's wastewater system for the purpose of emulsifying FOG or biologically/chemically treating FOG for grease remediation or as a supplement to interceptor maintenance is prohibited, unless a specific written authorization from The Industrial Pretreatment Department is obtained;
4. disposal of waste cooking oil into drainage pipes connected to the County sewage collection systems are prohibited. All waste cooking oils shall be collected and stored properly in receptacles such as barrels or drums for recycling or other acceptable methods of disposal;
5. discharge of any waste including FOG and solid materials removed from the grease control device or solids interceptor to the sewer system is prohibited; solids and/or grease removed from solids interceptors and grease control devices shall be disposed of according to all applicable regulations as part of the operation and maintenance requirements for grease interceptors; disposal shall be properly documented through completion of a Grease Trap/Grease Interceptor/Solids Interceptor Manifest form or some other appropriate disposal manifest; and
6. operation of grease interceptors with FOG and solids accumulation exceeding 25% of the design hydraulic depth of the grease interceptor (25% Rule) is prohibited.

C. FOG Wastewater Discharge Permits are not required to be obtained by Food Service Establishments (FSEs) unless specified by the Industrial Pretreatment Department. Issuance of a FOG permit will be done on an "as needed" basis as determined by the Industrial Pretreatment Department for entities that do not fully comply with the terms and conditions of this Rule. FOG permits are designed to bring FSEs into compliance with this Rule.

D. All Food Services Establishments and other identified entities shall implement Best Management Practices (BMPs) to minimize the discharge of FOG to the sewer system. Detailed requirements for Best Management Practices are specified in this Rule and explained in LCDU educational material. These may include kitchen practices and/or employee training programs that are effective in minimizing FOG discharge.

E. New Food Service Establishments are required to install, operate and maintain an adequately-sized grease interceptor (GI) necessary to maintain compliance with the objectives of this Rule. For new FSEs the grease interceptor shall be adequate to separate and remove FOG Contained in wastewater discharges prior to discharge to the sewer system. Fixtures, equipment, and drain lines located in the food preparation and clean-up areas of FSEs that are sources of FOG discharges shall be connected to the grease interceptor.

F. An existing FSE with a grease interceptor is required to operate and maintain its device as specified by this Rule. An existing FSE without a grease interceptor may be required to install and maintain one at the discretion of the Industrial Pretreatment Department.

G. If, in the opinion of LCDU, the installation of a grease interceptor is impossible due to site constraints, a new and/or existing Food Service Establishment may be required to install grease trap(s) in the waste line(s) leading from drains, sinks, and other fixtures or equipment where grease may be introduced into the sewer system in quantities that can cause blockage.

H. All Food Service Establishments shall comply with applicable provisions specified in Section 4 of this Rule. General compliance shall be established as follows.

1. New Construction/Tenant Finish Food Service Establishments shall include and install grease interceptors prior to commencing Discharges of wastewater to the sewer system, unless otherwise specified by the Lake County General Health District. Potential FSEs and tenant-finished FSEs shall provide space and plumbing segregation for the future installation of

one grease interceptor for each tenant space prior to commencing discharges to the sewer system.

2. Existing Food Service Establishment grease interceptors shall be properly operated and maintained. Included in proper operation and maintenance is the operation and maintenance of the grease interceptor so that no more than 25% of the capacity of the interceptor is filled with grease and/or solids. At minimum, cleaning of FSE GI shall be done at least every 90 days. The cleaning shall include scraping and cleaning baffles, walls, and side walls. proper disposal of all grease and solids and submitting proper documentation to the LDCU.
3. Existing Food Service Establishments <u>with a grease interceptor</u> which have caused or contributed to grease-related blockage(s) in the sewer system, or which have sewer laterals connected to "hot spots", may be required to service and clean their grease interceptor on a modified, more frequent schedule as determined by the LCDU. Existing FSEs which have been determined to contribute significant FOG to the sewer system by the LCDU (based upon inspection or sampling) may be required to service and clean their grease interceptor on a more frequent schedule as determined by the LCDU. More frequent GI maintenance may be a requirement for any FSE deemed to have reasonable potential to adversely impact the sewer system.
4. Should a FSE not comply with LCDU's, requirement to clean their GI on a more frequent basis, the LCDU may issue the FSE a FOG Wastewater Discharge Permit which will specify the modified cleaning and servicing schedule.
5. Existing Food Service Establishments <u>without a grease interceptor</u> which has caused or contributed to grease-related blockage(s) in the sewer system, or which have sewer laterals connected to "hot spot", may be required to install an appropriately sized grease interceptor. Existing FSEs which the LCDU has determined to contribute significant FOG to the sewer system (based upon inspection or sampling) may be required to install an appropriately sized grease interceptor.
6. Existing Food Service Establishments or Food Service Establishments that undergo remodeling or a change in operations as defined in this Rule, shall be required to install a grease interceptor.
7. A Limited Food Preparation Establishment, as defined in this Rule, may or may not be required to install a grease control device. The Lake County General Health District will make such determinations on a case-by-case basis.

5.08 <u>Non-Residential Properties</u>

Property owners of non-residential properties or their official designee(s) shall be responsible for the installation of a separate grease interceptor for each Food Service Establishment tenant located on single real property parcel. Maintenance of grease interceptors shall be the responsibility of the FSE operator.

5.09 <u>Sewer System Overflows (SSOs), Abatement Orders and Cost Recovery (Clean-up Costs)</u>

Food Service establishments found to have contributed to a sewer blockage, SSOs or any sewer system interferences resulting from the discharge of wastewater or waste containing FOG, may be ordered to install and maintain a grease interceptor and may be subject to a more restrictive plan to abate future problems. Furthermore, sewer lateral failures and SSOs caused by Food Service Establishments alone or collectively, are the responsibility of the private property owner or FSE(s).

If the LCDU must act immediately to clear a sewer blockage or contain and clean up a SSO caused by blockage of a private or public sewer lateral or system serving a Food Service establishment, or acts at

the request of the property owner or operator of the Food Service Establishment, the LCDU's costs for such abatement shall be entirely borne by the property owner or operator of the Food Service Establishment, and may constitute a debt to the LCDU as specified in these Regulations.

5.10 FACILITY REQUIREMENTS

All Food Service Establishments shall comply with the following requirements, wherever applicable as defined in these Regulations.

A. Drawing Submittal Requirement

1. New and Tenant-Finish FSEs shall be required to submit three copies of facility site plans, floor plans, mechanical and plumbing plans, and details to show all sewer locations and connections, any FOG control device, any grease interceptor or other pretreatment equipment and appurtenances by size, location, and elevation for evaluation. The submittal shall be to the Sanitary Engineer Division of the LCDU, in a form and content acceptable to the LCDU for expeditious review prior to construction. The review of the plans and procedures shall in no way relieve the Food Service Establishments of the responsibility of modifying the facilities or procedures in the future, as necessary to produce an acceptable discharge, and to meet the requirements of these Rules or any requirements of other Regulatory Agencies. Sanitary Engineer Division will review the submittal to determine the adequacy of the proposed FOG control mechanism(s) and may require changes to the plans when needed.
2. The drawings shall be prepared by an Ohio Registered Engineer.

B. Grease Interceptor Maintenance Requirements:

1. New and existing Grease Interceptors shall be maintained in efficient operating condition by periodic removal of the full content of the interceptor, which includes wastewater, accumulated FOG, floating materials, sludge and solids from interceptor walls, baffles and floors.
2. All existing and newly installed grease interceptors shall be maintained in a manner consistent with a maintenance frequency approved by the LCDU.
3. No FOG that has accumulated in a grease interceptor shall pass into any sewer lateral, sewer system, storm drain, or public right of way during maintenance activities.

C. The maintenance frequency for all Food Service Establishments with a grease interceptor shall be determined by one the following methods as determined by the LCDU.

1. Grease interceptors shall be fully pumped out and cleaned at a frequency such that the combined FOG and solids accumulation does not exceed 25% of the total design hydraulic depth of the grease interceptor. This is to ensure that the minimum hydraulic retention time and required available hydraulic volume is maintained to effectively intercept and retain FOG discharged to the sewer system.
2. All Food Service Establishments with a Grease Interceptor shall fully pump and clean out their grease interceptor not less than every 90 days.
3. If a FSE wishes to clean its GI less often than the minimum specified in this Rule (every 90 days), a waiver request is required. The owner/operator of a Food Service Establishment may, at any time,

submit a request to the LCDU for a change in the maintenance frequency. The Food Service Establishment has the burden of responsibility to demonstrate that the requested change in frequency reflects actual operating conditions based on the average FOG accumulation over time and meets the requirements described in these Regulations; and that it is in full compliance with the conditions of this Rule. Upon determination by the Industrial Pretreatment Department that the requested revision is justified, the maintenance frequency will be reduced and documented in a letter to the owner/operator. Upon determination that the requested revision is not justified, the FSE will be required to maintain the GI at the specified frequency.

4. If the grease interceptor, at any time, contains FOG and solids accumulation that does not meet the requirement described in these Regulations, the Food Service Establishment shall be required to have the grease interceptor serviced within five (5) business days such that all fats, oil, grease, sludge, and other material are completely removed from the grease interceptor. If it is determined that an overflow or blockage situation exists, the interceptor shall be serviced immediately. If deemed necessary, the Industrial Pretreatment Department may also increase the maintenance frequency of the grease interceptor from the current frequency.

D. Wastewater, accumulated FOG, floating materials, sludge/solids, and other materials removed from the grease interceptor shall be properly disposed off site by waste haulers in accordance with federal, state, and/or local laws.

E. Food waste disposal units shall not be connected to or discharged into any grease interceptor.

F. Reporting and recordkeeping requirements related to GI maintenance are detailed in these Regulations.

5.11 <u>Grease Trap Requirements</u>

A. New and/or existing Food Service Establishments may be required to install grease trap(s) in the waste line(s) leading from drains, sinks, and other fixtures or equipment where grease may be introduced into the sewer system in quantities that can cause blockage.

B. Sizing and installation of grease traps shall conform to the current edition of the International Plumbing Code, Ohio version and also to any more stringent local requirement, as enforced by the Lake County General Health District.

5.12 <u>Grease Trap Maintenance Requirements</u>

A. New and existing grease traps shall be properly maintained in efficient operating condition by thoroughly cleaning and removing accumulated grease on a monthly basis, or more frequently as required by LCDUs.

B. New and existing grease traps shall be maintained free of all food residues and any FOG waste removed during the cleaning and scraping process. Materials removed from grease traps shall be disposed of properly and NEVER discharged to LCDUs sewage collection system.

C. New and existing grease traps shall be inspected periodically to check for leaking seams and pipes, and for effective operation of the baffles and flow-regulating device. Grease traps and their baffles shall be maintained free of all caked-on FOG and waste. Removable baffles shall be removed and cleaned during the cleaning and maintenance process.

D. Food waste disposal units shall not be connected to or discharged into any grease trap.

5.13 Monitoring Facilities Requirements

A. The LCDU may require the Food Service Establishment to construct and maintain in proper operating condition, at the Food Service Establishment's sole expense, constituent monitoring and/or sampling facilities as approved by the LCDU.

B. The location of the monitoring or metering facilities shall be subject to approval by the Industrial Pretreatment Department.

C. Food Service Establishments may be required to provide immediate, clear, safe and uninterrupted access to the LCDU inspectors to the Food Service Establishment's monitoring and metering facilities.

5.14 Requirement for Best Management Practices

A. All Food Service Establishments shall implement Best Management Practices in accordance with the requirement and guidelines established by the County under its FOG Control Program in an effort to minimize the discharge of FOG to the sewer system.

B. All Food Service Establishments shall be required, at a minimum, to comply with the following Best Management Practices.

1. Installation of floor drain grates/screens - Approved floor drain grates/screens shall be installed in accordance with the International Plumbing Code on all drainage pipes in food preparation areas.
2. Segregation and collection of waste cooking oil - All waste cooking oil shall be collected and stored properly in recycling receptacles such as barrels or drums. Such recycling haulers or an approved recycling facility must be used to dispose of waste cooking oil.
3. Disposal of Food Waste - All food waste shall be disposed of directly into the trash or garbage, and not in sinks. Double-bagging food wastes that have the potential to leak in trash bins is recommended.
4. Employee Training - Employees of the food service establishment shall be trained by ownership/management a least annually, on the following subjects (Upon request, LCDU can provide BMP training video to FSEs to assist with this requirement):

    a. How to "dry wipe" pots, pans, dishware and work areas before washing to remove grease;
    b. How to properly dispose of food waste and solids in enclosed plastic bags prior to disposal in trash bins or containers to prevent leaking and odors;
    c. The location and use of absorption products to clean under fryer baskets and other locations where grease may be spilled or dripped; and
    d. How to properly dispose of grease or oils from cooking equipment into a grease receptacle such as a barrel or drum without spilling.

C. Maintenance of kitchen exhaust filters - Filters shall be cleaned as frequently as necessary to be maintained in good operating condition. The wastewater generated from cleaning the exhaust filter shall be disposed properly through a grease interceptor or grease trap.

D. Kitchen signage - Best management and waste minimization practices shall be posted conspicuously in the food preparation and dishwashing areas at all times.

5.15 CATEGORICAL PRETREATMENT STANDARDS

Categorical pretreatment standards as promulgated by the U.S. EPA pursuant to the Act shall be met by all industrial users of a regulated industrial category. The national categorical pretreatment standards are codified at 40 CFR Chapter I, Subchapter N, Part 405-471. These standards, unless specifically noted otherwise, are in addition to all applicable pretreatment standards and requirements set forth in this resolution.

A. Existing sources shall comply with all applicable categorical pretreatment standards within three (3) years of the effective date unless a shorter compliance time is specified. Existing sources, which become categorical industrial users after promulgation of an applicable categorical pretreatment standard, shall be considered existing industrial users except where those users meet the definition of new source.

B. New sources shall install, have in operating condition, start-up, and maintain all pollution control equipment necessary to meet applicable pretreatment standards before beginning to discharge wastewater to the POTW. New sources shall comply with all applicable pretreatment standards within the shortest feasible time, but not more than 90 days after the start of discharge.

C. Where a Lake County Regional Sewer District POTW consistently achieves removal rates to meet discharge limitations for a pollutant limited by categorical pretreatment standards, Lake County may apply to the Ohio EPA for modification of specific limits in the categorical pretreatment standards in accordance with the requirements of 40 CFR 403.7. With written prior approval of the Ohio EPA, Lake County may modify discharge limits in the categorical pretreatment standards if the requirements of 40 CFR 403.7 are fulfilled.

D. Lake County may convert limits of categorical pretreatment standards which are only expressed in terms of mass of pollutant per unit of production (or other measure of operation) to equivalent limits expressed as mass of pollutant discharged per day, or effluent concentrations for purposes of calculating effluent limits applicable to individual industrial users, provided that Lake County uses actual long-term production figures and actual long-term flow rates.

E. For new sources, actual production shall be estimated using projected production. The equivalent calculated limits shall be deemed the pretreatment standards, and applicable industrial users shall be required to comply with these equivalent limits in lieu of the promulgated categorical pretreatment standards from which they were derived.

F. Where categorical pretreatment standards specify one limit for calculating maximum daily discharge limits and a second limit for calculating maximum monthly average, or 4-day average limits, the same production or flow figure shall be used to calculate both types of equivalent limits.

G. Any industrial user which has equivalent mass or concentration effluent limits calculated from a production based categorical pretreatment standard shall notify Lake County within two (2) business days after the industrial user has reasonable basis to know that the production level will significantly change within the next calendar month. If a regulated industrial user does not notify Lake

County of such anticipated change, the industrial user shall meet the mass or concentration effluent limits that were calculated on the original estimate of the long-term average production rate.

H. Where process wastewater effluent regulated by categorical pretreatment standards is mixed with wastewaters other than those generated by the regulated process, Lake County may impose an alternate limit using the combined waste stream formula in 40 CFR 403.6(e).

I. Any industrial user may request a variance from a categorical pretreatment standard if the user can prove, pursuant to the procedural and substantive provisions in 40 CFR 403.13, that factors relating to its discharge are fundamentally different from the factors considered by EPA when developing the categorical pretreatment standard. The County will then determine if a variance is warranted.

J. Any industrial user may obtain a net gross adjustment to a categorical standard in accordance with 40 CFR 403.15.

5.16 LOCAL LIMITATIONS

The discharge of non-acceptable industrial wastewater into the wastewater treatment system, whether directly or indirectly, is prohibited. Wastewater shall be deemed non-acceptable when the concentration of pollutants in the discharge exceeds the local limits. Pollutants or toxic substances include, but are not limited to:

Pollutant	Local Limit
Arsenic	0.109 mg/L
Cadmium	0.079 mg/L
Chromium (Total)	2.087 mg/L
Chromium (Hexavalent)	0.80 mg/L
Copper (Daily Max.)	0.898 mg/L
Copper (Monthly Avg.)	0.567 mg/L
Total Cyanide	0.159 mg/L
Lead	0.503 mg/L
Mercury	* Prohibited
Molybdenum	0.16 mg/l
Nickel	0.707 mg/L
Selenium	0.277 mg/L
Silver	0.176 mg/l
Zinc	0.89 mg/L
Non-Polar Oil & Grease	50.0 mg/L
Polar Oil & Grease	100.0 mg/L

* Any concentration above the detection limit.
(Detection limit – 0.5ug/l using US EPA method 245.1 or 245.2)

The preceding list of pollutants is subject to revision as required to meet water quality standards or effluent standards imposed by state or federal agencies. In special cases (low volume users), the concentration of pollutants in the wastewater may be exceeded if it is determined by Lake County that the total pounds of pollutants discharged to the wastewater treatment system are not harmful to or will not

interfere with the wastewater treatment system's ability to meet any applicable water quality or effluent standard.

Lake County may impose mass limitations on industrial users where the imposition of mass limitations is deemed appropriate.

In cases where the character of industrial wastewater from any manufacturing or industrial plant, building, or premises is such that it will damage the wastewater treatment system or cannot be treated satisfactorily at the POTW, Lake County shall compel such users to dispose of such waste and prevent it from entering the sewer system.

5.17 STATE REQUIREMENTS

State requirements and limitations on industrial discharges to the POTW shall be met by all users, which are subject to such standards in any instance in which they are more stringent than federal requirements and limitations or those in this or any other applicable resolution.

5.18 RIGHT OF REVISION

Lake County reserves the right to amend this resolution to provide for more stringent limitations or requirements on discharges to the POTW where deemed necessary to comply with the objectives set forth in Item 5.1 of this resolution. Lake County shall perform a technical evaluation and justification of the need to revise local limitations at least as frequently as submission of the NPDES permit renewal application.

5.19 DILUTION PROHIBITION

No industrial user shall increase the use of potable or process water in any way, or to mix separate waste streams for the purpose of diluting a discharge as a partial or complete substitute for adequate treatment to achieve compliance with any pretreatment standards or requirements or any provision set forth in this resolution (except where expressly authorized to do so by an applicable pretreatment standard or requirement). Lake County may impose mass limitations on industrial users, which are using dilution to meet applicable pretreatment standards or requirements, or in other cases where Lake County deems the imposition of mass limitations appropriate.

III. PRETREATMENT OF WASTEWATER

5.20 PRETREATMENT FACLITIES

Industrial users shall provide wastewater treatment as necessary to comply with this resolution and shall achieve compliance with all applicable categorical pretreatment standards, local limits and the prohibitions set out in Item 5.04 of this resolution within the time limitations specified by Ohio EPA or Lake County, whichever is more stringent. Any facilities necessary for compliance shall be provided, operated, and maintained at the user's expense. Detailed plans describing such facilities and operating procedures shall be submitted to Lake County for review and approval prior to submission to Ohio EPA for final approval and Permit to Install pretreatment facilities. The review of such plans and operating procedures shall in no way relieve the user from the responsibility of modifying such facilities as necessary to produce a discharge

acceptable to Lake County under the provisions of this resolution. Lake County may require an industrial user of the wastewater treatment system to install and maintain, on their property and at their expense, a suitable storage and flow control facility to ensure equalization of flow and reduce the potential for slug load discharges as defined in Paragraph 5.03.YY and described in Item 5.14 of this resolution. A discharge permit may be issued solely for flow equalization.

5.21 HIGH STRENGTH WASTEWATER

Acceptance of any water or waste with concentrations of any acceptable pollutants in excess of those concentrations normal to domestic sanitary waste shall be subject to the review and approval of Lake County. If in the opinion of Lake County the excess concentrations could cause operation or maintenance problems with the wastewater treatment system, pretreatment of the wastewater may be required prior to discharge into the wastewater collection system. The degree of pretreatment required shall be specified by Lake County, but the manner in which this pretreatment is achieved and the cost of such pretreatment will be the responsibility of the industrial user.

When excessive concentrations are permitted to be discharged into the wastewater treatment system, the industrial user shall be charged for the collection and treatment of these excessive materials in accordance with the following schedule:

All industrial users discharging into the Lake County wastewater treatment system that contain more than the permitted concentration of suspended solids, BOD and phosphorus for normal strength wastewater, as defined in Paragraph 5.03.EE of this resolution and are acceptable for discharge shall be subject to a surcharge. In addition to any surcharge, the industrial user shall pay the Sewer Service Charge as defined and calculated in Paragraph 5.03.WW of this resolution.

The amount of the industrial user's surcharge shall be determined on the basis of the following three (3) constituents of the wastewater discharge:

1. Total Suspended Solids as defined in Paragraph 5.03.BBB of this resolution.
2. BOD as defined in Paragraph 5.03.C of this resolution.
3. Phosphorus as defined in Paragraph 5.03.II of this resolution.

When the concentration of suspended solids, BOD or phosphorus of wastewater accepted for admission to the Lake County wastewater treatment system exceeds the values of normal strength wastewater, as defined in Paragraph 5.03.EE of this resolution, the surcharge shall be the sum of the suspended solids surcharge, the BOD surcharge and the phosphorus surcharge. Calculations are as follows:

1. Suspended Solids Surcharge = Pounds of excess suspended solids per day times $0.19 per pound.
2. BOD Surcharge = Pounds of excess BOD per day times $0.39 per pound.

3. Phosphorus Surcharge = Pounds of phosphorus per day times $1.37 per pound.

Lake County shall determine these calculations. In addition to the above surcharges, Lake County may enact additional surcharges against any industrial user, which discharges pollutants into the Lake County wastewater treatment system, or for any other reason that the county deems necessary and appropriate. Lake County shall enact or extend rules and regulations requiring pretreatment of wastewater discharge.

5.22 <u>AUTHORITY FOR CONTROL OF WASTEWATER DISCHARGES</u>

If any waters or wastes are discharged or are proposed to be discharged to the Lake County wastewater treatment system, which contain the substances or possess the characteristics enumerated in Chapter II of this resolution and which in the judgment of the LCDU may have a deleterious affect upon the wastewater treatment system, including violations of applicable water quality standards, or which otherwise create a hazard to life or constitute a public nuisance, Lake County may:

1. Reject the wastes, or
2. Require pretreatment to an applicable condition for discharge to the Lake County wastewater treatment system,
3. Require control over the quantities and rates of discharge, and/or
4. Require payment to cover the additional cost of handling and treating the wastes under the provisions of Paragraph 5.12 of this resolution.

If the LCDU permits or requires pretreatment or equalization of waste flows, the design and installation of the treatment and equipment shall be subject to the review and approval of Lake County and Ohio EPA and subject to all applicable codes, resolutions, and laws. When such facilities are provided, they shall be operated and maintained in satisfactory and effective condition by the owner at the owner's expense.

When considering the above alternatives, the LCDU shall give consideration to the economic impact of each alternative on the industrial user.

5.23 <u>ACCIDENTAL DISCHARGE AND SLUG LOAD CONTROL</u>

A. All industrial users shall provide protection from accidental discharge of prohibited or regulated materials or substances established by this resolution. Where necessary, facilities to prevent accidental discharge of prohibited materials shall be provided and maintained at the industrial user's expense. Detailed plans showing facilities and operating procedures to provide protection shall be submitted to Lake County for review, and shall be approved by Lake County and Ohio EPA before construction of the facility. Review and approval of such plans and operating procedures by Lake County shall not relieve the industrial user from the responsibility to modify it's facility as necessary to meet the requirements of this resolution.

B. Industrial users shall notify Lake County immediately upon the occurrence of an accidental discharge or slug load of substances prohibited by this resolution. The notification shall include location of discharge, date and time of discharge, concentration and volume, and corrective actions. Any industrial user who discharges a slug load of prohibited materials shall be liable for any expense, loss or damage to the wastewater treatment system, in addition to the amount of fines imposed on Lake County on account thereof under state or federal law.

C. Industrial users shall notify Lake County, the Ohio EPA Regional Waste Management Division, and the State of Ohio hazardous waste authorities in writing of any discharge into the Lake County wastewater treatment system, which, if otherwise disposed of, would be hazardous waste under 40 CFR Part 261.

D. Industrial users shall notify Lake County in advance of any substantial changes in the volume or character of pollutants in their discharge, including the listed or characteristic hazardous wastes under 40 CFR Part 261.

Emergency notification procedures shall be posted on the industrial user's premises to instruct employees on procedures of notification in the event of an accidental spill or slug load discharge.

E. Lake County shall evaluate, at least every two years, whether each significant industrial user discharging to the Lake County wastewater treatment system requires a plan to control slug load discharges. If Lake County determines that a slug control plan is necessary, the industrial user will be required to submit such a plan to Lake County. A slug control plan shall include the following:

1. General Information – General information should include the industry name and address, industry contact, a brief description of the discharge practices, applicable pretreatment standards, a description of previous slugs and corrective actions, security provisions and employee training.
2. Facility Layout Flow Diagrams
   a. General layout of the facility
   b. Areas occupied by manufacturing activities, property boundaries, drainage of rainwater, and connections to the Lake County wastewater treatment system.
   c. Hazardous materials process and storage areas, waste handling, storage, and treatment facilities.
   d. Loading and unloading areas.
   e. Direction of drainage from hazardous materials and waste handling, process, storage, and treatment areas.
   f. Floor drains, pipes, and channels, which lead away from potential, leak or spill areas. (Identify by coding footnotes or narratives describing drainage patterns).

g. Flow diagrams showing wastewater flow piping, flow rate, tanks and capacities, treatment systems, and final destination of flows.

3. Material Inventory

a. Materials - Both chemical and trade names should be listed in the inventory.

b. Location in facility

c. Maximum volume including container volume.

d. Container description – The description should include the type of container and types of container attachments such as valves, pumps, transfer pipes, etc. Include the physical condition of the containers and transfer equipment.

e. Comments – Additional comments should include information on the physical, chemical, and toxicological effects of each material, and special precautions that should be taken when handling these materials. A discussion should also be provided on the procedures to prevent contact between incompatible materials. Demonstrate that the following three compatibility aspects have been considered:

1) construction of the container;
2) other materials in the immediate vicinity; and
3) the surrounding environment.

4. Spill Potential Reduction Measures

a. Describe all routine operation and maintenance (including housekeeping and replacement of worn-out equipment) performed to minimize spills.

b. Indicate the frequency of inspections and monitoring for leaks and other conditions that could lead to spills.

c. Discuss the compatibility of the storage tanks, vessels, pumps, etc. with the material stored or processed.

d. Describe the spill detection equipment.

e. Describe drum handling procedures and equipment.

f. Discuss the safeguards to prevent unauthorized tampering with equipment, valves, etc.

g. Determine all unnecessary floor drains and provide a plan to eliminate access to the sanitary sewer system.

5. Spill Containment

a. Describe all spill containment equipment.

b. Provide the capacity for each containment area.

c. List the volumes stored in each containment area.

d. Describe the method to remove accumulated rainwater in the containment area.

e. Describe the method to remove a spill from the containment area.

6. Procedures for Clean-up, Treatment, and/or Disposal of Spilled Materials

a. Describe spill clean-up procedures

b. Describe spilled material treatment procedures.

c. Describe spilled material disposal methods. These procedures should be consistent with the ones established in the facility's OSHA Emergency Action Plan, as required by 29 CFR 1910.38.

7. Slug Reporting

a. Describe the procedure for reporting and documenting spills and slug discharges. Include:
   1) the time, date and cause of the incident;
   2) the impact of the spill on the Lake County wastewater treatment system and environment;
   3) extent of the injury and/or damage; and
   4) how other incidents of this type can be avoided in the future.

b. The report should also evaluate the adequacy of the response procedures.

c. Notify the appropriate authorities.

8. Training Program

a. Describe the facility slug control training program in detail, including intervals for the training sessions.

b. The OSHA required Emergency Action Plan training program is acceptable if responsibilities are uniform.

9. Certification

a. An authorized representative of the industrial user as defined in Paragraph 5.03.B shall certify the adequacy of the measures described in the Slug Control Plan as follows:

b. "Based on my inquiry of the person or persons directly responsible for managing compliance with the slug control measures in the Slug Control Plan, I certify that, to the best of my knowledge and belief, this facility is implementing the Slug Control Plan as submitted to Lake County."

5.24 OPERATING UPSET

Any industrial user who experiences an upset in operations which places the industrial user in a temporary state of non-compliance with this resolution, permit, or order issued hereunder shall notify Lake County thereof within 24 hours of first awareness of the commencement of the upset. Where this information is given orally, a written follow-up report shall be filed by the industrial user with Lake County within 5 days. The report shall discuss the following:

1. Description of the upset, the cause of the upset, the substance thought to have caused the upset and the upset's impact on the industrial users compliance status.

2. Duration of non-compliance, including exact dates and times of non-compliance, and if the non-compliance continues, the time by which compliance is reasonably expected to occur.

3. All steps taken to or to be taken to reduce, eliminate, and prevent recurrence of such an upset or other condition of non-compliance.

The report shall also demonstrate that the treatment facility was being operated in a prudent and workmanlike manner and was in compliance with applicable operation and maintenance procedures.

5.25 BYPASSES

No industrial user shall bypass or intentionally divert the waste stream from any portion of the pretreatment facility unless:

1. Bypass is unavoidable to prevent loss of life, personal injury, or severe property damage;
2. There are no feasible alternatives to the bypass, for example, use of auxiliary treatment facilities, retention of untreated waste, preventive maintenance during normal periods of equipment downtime. This condition is not satisfied if adequate back-up equipment should have been installed in the exercise of reasonable engineering judgment to prevent a bypass which occurred during normal periods of equipment downtime or preventive maintenance; and

3. The industrial user submitted the notices discussed below.

The LCDU may only approve an anticipated bypass after considering its adverse effect and if the LCDU determines:

1. The bypass will not cause violation of pretreatment standards or requirements or any provision of this resolution; and
2. The bypass is for essential maintenance to ensure the efficient operation of pretreatment facilities.

If an industrial user knows in advance of the need for bypass, the industrial user shall submit a written notice to Lake County at least 10 days before the date of the bypass, and shall not permit the bypass without Lake County's authorization. If an industrial user experiences an unanticipated bypass which exceeds pretreatment standards or requirements, the industrial user shall verbally notify Lake County within 24 hours from the time the industrial user becomes aware of the bypass, and shall submit within 5 days of verbal notification, a written report describing the bypass event, and its cause; the bypass duration, including exact times and dates; and if the bypass has not been corrected, the time it is expected to continue and measures taken to reduce, eliminate, and prevent its recurrence. The LCDU may waive the written report if the verbal report is received within 24 hours.

IV. INDUSTRIAL WASTEWATER DISCHARGE PERMITS

5.26 DISCHARGE PERMIT REQUIREMENTS

A. All industrial users must notify the Lake County Regional Sewer District's Industrial Pretreatment Coordinator of the nature and characteristics of their wastewater prior to commencing their discharge as described in Item 5.02.

B. It shall be unlawful for significant industrial users to discharge wastewater, either directly or indirectly, into any Lake County wastewater treatment system without first obtaining an industrial user pretreatment permit from the LCDU. Any violation of the terms and conditions of an industrial user pretreatment permit shall be deemed a violation of this resolution. Obtaining an industrial user pretreatment permit does not relieve a permittee of its obligation to obtain permits required by federal, state or local law.

C. Lake County may require that other industrial users discharging to any Lake County wastewater treatment system obtain industrial user pretreatment permits as necessary to fulfill the purpose of this resolution.

D. Any significant industrial user located beyond Lake County's jurisdiction which discharges to any Lake County wastewater treatment system that does not already have a permit shall submit a permit application in accordance with Item 5.18 of this resolution within 90 days of the effective date of this resolution. New industrial users located beyond Lake County's jurisdiction which plan to discharge to any Lake County wastewater treatment system shall submit such applications to the LCDU 90 days prior to discharging into any Lake County wastewater treatment system. Upon review and approval of such action, the LCDU may enter into a contract with the industrial user that requires the industrial user to subject to and abide by this resolution, including all permitting, compliance monitoring, reporting, and enforcement provisions herein.

E. Existing Connections – Any industrial user which discharges into the Lake County wastewater treatment system prior to the effective date of this resolution who does not already have an industrial user pretreatment permit and who wishes to continue such discharges in the future, shall within 90 days after said date, apply to the LCDU for an industrial user pretreatment permit and shall not cause or allow discharge to any Lake County wastewater treatment system to continue after 180 days from and after the effective date of this resolution except in accordance with a permit issued by the LCDU. Within 180

days after the effective date of a categorical pretreatment standard or a final administrative category determination, whichever is later, existing industrial users subject to such categorical pretreatment standards and currently discharging to or scheduled to discharge to any Lake County wastewater treatment system, must submit a pretreatment permit application if a baseline monitoring report was not previously submitted.

F. New Connections – Any significant industrial user proposing to begin or recommence discharging to any Lake County wastewater treatment system must obtain an industrial user pretreatment permit prior to beginning or recommencing such discharge. An application for this permit must be filed at least 90 days prior to the anticipated start up date and must include information on the method of pretreatment intended to meet applicable pretreatment standards.

5.27 <u>PERMIT APPLICATION</u>

In order to be considered for a pretreatment permit, all industrial users required to obtain a permit must submit the following information on a Lake County Utilities permit application form along with the appropriate permit application fee:

A. Name, address and location of facility

B. Standard Industrial Classification (SIC) code(s)

C. Wastewater constituents and characteristics including any pollutants in the discharge that are limited by any federal, state, or local standards. Sampling and analysis will be in accordance with procedures established by U.S. EPA at 40 CFR Part 136, as amended (except as provided in Paragraph 5.22 of this resolution), and must conform at a minimum to baseline monitoring requirements at 40 CFR 403.12(b) for categorical industries.

D. Time and duration of the discharge

E. Daily maximum, daily average and monthly average wastewater flow rates, including daily, monthly and seasonal variations, if any. The LCDU may allow for verifiable estimates of these flows where justified by cost or feasibility considerations.

F. Descriptions of activities, facilities and plant processes on the premises, including a list of all raw materials and chemicals used at the facility, which are or could accidentally or intentionally be discharged to a Lake County wastewater treatment system.

G. The site plans, floor plans, and mechanical and plumbing plans and details to disclose all sewers, floor drains, and appurtenances by size, location and elevation.

H. Each product produced by type, amount, process or processes and production rate.

I. Type and amount of raw materials processed (average and maximum per day).

J. Number of employees and hours of operation, including proposed or actual hours of operation of the pretreatment system

K. The nature and concentration of any pollutants in the discharge which are limited by any federal, state, or local pretreatment standards and requirements, including a statement regarding

whether or not compliance is being achieved with these standards on a consistent basis and if not, whether additional operation and maintenance (O&M) activities and/or additional pretreatment is required for the discharge to meet these standards. Sampling requirements must, at a minimum, conform to baseline monitoring requirements, 40 CFR 403.12(b), for categorical industries.

L. If additional pretreatment and/or O&M will be required to meet the standards, then the industrial user shall indicate the time frame to accomplish installation or adoption of such additional treatment and/or O&M. The completion date in this schedule shall not be longer than the compliance date established for the applicable pretreatment standard. The following conditions apply to this schedule:

1. The schedule shall contain progress increments in the form of dates for commencement and completion of major events leading to the construction and operation of additional pretreatment required for the industrial user to meet the applicable pretreatment standards. Major events include: hiring an engineer, completing preliminary plans, completing final plans, executing contracts for major components, commencing construction, beginning operation and conducting routine operation. No progress increment shall exceed 9 months.

2. No later than 14 days following each date in the schedule and the final date for compliance, the industrial user shall submit a progress report to the LCDU including, at a minimum, whether or not compliance with the increment of progress was achieved, reason for any delay, and if appropriate, steps to return to the established schedule. No progress report shall exceed 9 months between any progress report.

The LCDU may deem any other information as necessary to evaluate the permit application.

All plans required in Paragraph 5.18 of this resolution must be certified for accuracy by a state registered professional engineer.

All applications must contain the following certification statement and be signed by an authorized representative of the industrial user as defined in Paragraph 5.02.B of this resolution:

> "I certify under penalty of law that this document and all attachments were prepared under my direction or supervision in accordance with a system designed to assure that qualified personnel properly gather and evaluate the information submitted. Based on my inquiry of the person or persons who manage the system, or those persons directly responsible for gathering the information, the information submitted is, to the best of my knowledge and belief, true, accurate, and complete. I am aware that there are significant penalties for submitting false information, including the possibility of fine and imprisonment for knowing violations."

5.28 <u>PRETREATMENT PERMIT CONTENTS</u>

Pretreatment permits shall include such conditions as are reasonably deemed necessary by the LCDU to prevent pass through or interference, protect the receiving water quality, protect worker health and safety, facilitate POTW sludge management and disposal, protect ambient air quality and protect against damage to the wastewater treatment systems. Permits may contain, but need not be limited to, the following:

A. Limits on the average and/or maximum rate of discharge, time of discharge, and/or requirements for flow regulation and equalization.

B. Limits on the average and/or maximum concentration, mass, or other measure of identified wastewater constituents or properties based on applicable general pretreatment standards in 40 CFR Part 403, categorical pretreatment standards, local limitations, and state and local law.

C. Requirements for the installation of pretreatment technology or construction of appropriate containment devices, etc., designed to reduce, eliminate, or prevent the introduction of pollutants into the wastewater treatment system.

D. Development and implementation of spill control plans or other special conditions including additional management practices necessary to adequately prevent accidental, unanticipated, or routine discharges.

E. The unit charge or schedule of user charges and fees for the management of the wastewater discharged to the wastewater treatment system.

F. Requirements for installation and maintenance of inspection and sampling facilities.

G. Specifications for monitoring programs, which may include sampling locations, frequency of sampling, number, types, and standards for tests, and reporting schedules.

H. Compliance schedules satisfying the conditions in Paragraph 5.18.L.1 of this resolution.

I. Requirements for submission of technical reports or discharge reports.

J. Requirements for maintaining and retaining plant records relating to wastewater discharge as specified by the LCDU and affording the director, or his representatives, access thereto.

K. Requirements for notification of any new introduction of wastewater constituents or of any substantial change in the volume or character of the wastewater discharged to the wastewater treatment system.

L. Requirements for the notification of any change in the manufacturing and/or pretreatment process used by the permittee.

M. Requirements for the notification of excessive, accidental, or slug load discharges.

N. A statement of applicable administrative, civil, and criminal penalties for violation of pretreatment standards and requirements.

O. Other conditions as deemed appropriate by the LCDU to ensure compliance with this resolution and state and federal laws, rules and regulations.

P. A statement that compliance with the permit does not relieve the permittee of responsibility for compliance with all applicable federal pretreatment standards, including those which become effective during the term of the permit.

5.29 PERMIT ISSUANCE PROCESS

A. Permit Duration – Permits shall be issued for a specified time period, not to exceed 5 years. A permit may be issued for a period less than 5 years, at the discretion of the LCDU.

B. Public Notification – The LCDU will afford notice to interested persons of intent to issue a pretreatment permit, at least 14 days prior to issuance. The notice will indicate a location where the draft permit may be reviewed and an address where written comments may be submitted.

C. Permit Appeals – The LCDU will provide all interested persons with notice of final permit decisions. Upon notice by the LCDU, any person, including the industrial user, may petition to appeal the terms of the permit to the LCDU within 30 days of the notice.

1. Failure to submit a timely petition for review shall be deemed to be a waiver of the appeal.

2. In the petition, the appealing parties must indicate the permit provisions objected to, the reasons for the objection, and the alternative condition, if any, it seeks to be placed in the permit.

3. The Board shall not stay the effectiveness of the permit pending reconsideration unless, there is a threat to the public health or safety. If, after considering the petition and any arguments put forth by the LCDU, the Board determines that reconsideration is proper, it shall remand the permit back to the LCDU for re-issuance. Those permit provisions being reconsidered by the LCDU shall be stayed pending re-issuance.

4. The Board's decision not to reconsider a final permit shall be considered final administrative action for purposes of judicial review.

5. Aggrieved parties seeking judicial review of the final Board action must do so by filing a complaint with the appropriate local court for Lake County in accordance with state and local law.

D. Permit Action – The LCDU may modify the permit for good cause including, but not limited to, the following:

1. To incorporate any new or revised federal, state, or local pretreatment standards or requirements.

2. Material or substantial alterations or additions to the industrial users operation processes, or discharge volume or character, which were not considered in drafting the effective permit.

3. A change in any condition in either the industrial user or the POTW that requires either a temporary or permanent reduction or elimination of the authorized discharge.

4. Information indicating that the permitted discharge poses a threat to the Lake County wastewater treatment system, wastewater treatment personnel, or the receiving waters.

5. Violation of any terms or conditions of the permit.

6. Misrepresentation or failure to disclose fully relevant facts in the permit application or in any required reporting.

7. Revision of or a grant of variance from such categorical standards pursuant to 40 CFR 403.13.

8. To correct typographical or other errors in the permit.

9. To reflect transfer of the facility ownership and/or operation to a new owner/operator.

10. Upon request of the permittee, provided such request does not create a violation of any applicable requirements, standards, laws, or rules and regulations.

    a. The filing of a request by the permittee for a permit modification, revocation and re-issuance, or termination, or notification of planned changes or anticipated non-compliance, does not stay any permit condition.

E. Permit Transfer – Permits may be reassigned or transferred to a new owner and/or operator with prior approval of the LCDU provided that the following conditions are met:

1. The permittee must give at least 30 days advance notice to the Director.

2. The notice must include a written certification by the new owner which:

    a. States the new owner has no immediate intent to change the facility's operations and processes.

    b. Identifies the specific date on which the transfer is to occur.

    c. Acknowledges full responsibility for complying with the existing permit.

F. Permit Termination – Pretreatment permits may be terminated in accordance with Paragraph 5.27.H of this resolution. Reasons for permit termination may include the following:

1. Falsifying self-monitoring reports
2. Tampering with monitoring equipment
3. Refusing to allow timely access to the facility premises and records
4. Failure to meet effluent limitations
5. Failure to pay fines
6. Failure to pay sewer charges

7. Failure to meet compliance schedules

G. Permit Re-issuance – The industrial user shall apply for permit re-issuance by submitting a complete permit application a minimum of 90 days prior to the expiration of the existing permit.

H. Continuation of Expired Permits – An expired permit will continue to be effective and enforceable until the permit is reissued if:

1. The industrial user has submitted a complete permit application at least 90 days prior to the expiration date of the existing permit

2. The failure to reissue the permit, prior to the expiration of the existing permit, is not due to any act or failure on the part of the industrial user.

I. Special Agreements – Nothing in this resolution shall be construed as preventing any special agreement or arrangement between Lake County and any user whereby wastewater of unusual strength or character is accepted into the wastewater treatment system and specially treated and subject to any payments or user charges, as may be applicable. However, no discharge, which violates pretreatment standards, will be allowed under the terms of such special agreements. If, in the opinion of the LCDU, the wastewater may have the potential to cause or result in any of the following circumstances, no special agreement will be made:

1. Pass-through or interference

2. Endanger POTW employees or the public

V. COMPLIANCE MONITORING AND REPORTING

5.30 BASELINE MONITORING REPORTS

A. Within either 180 days after the effective date of a categorical pretreatment standard, or the final administrative decision on a category determination under 40 CFR 403.6(a)(4), whichever is later, existing categorical users currently discharging to or scheduled to discharge to the Lake County wastewater treatment system shall submit to Lake County a report which contains the information listed in Paragraph 5.21.B. At least 90 days prior to commencement of discharge, new sources and sources that become categorical users subsequent to the promulgation of an applicable categorical standard, shall submit to Lake County a report which contains the information listed in Paragraph 5.21.B. A new source shall report the method of pretreatment to meet applicable categorical pretreatment standards. A new source also shall give estimates of anticipated flow and quantity of pollutants to be discharged.

B. Industrial users described above shall submit the information set forth below.

1. Identifying Information - The name and address of the facility, including the name of the owner and operator.

2. Environmental Permits - A list of any environmental permits held by or for the industrial user.

3. Description of Operations - A brief description of the nature, average rate of production, and standard industrial classifications of the operation(s) carried out by such industrial user. This description should include a schematic process diagram, which indicates points of discharge to the Lake County wastewater treatment system from regulated processes.

4. Flow Measurement - Information showing the measured average daily and maximum flow, in gallons per day, to the Lake County wastewater treatment system from regulated process waste streams and other streams, as necessary, to allow use of the combined waste stream formula set forth in 40 CFR 403.6(e).

5. Measurement of Pollutants
   a. The categorical pretreatment standards applicable to each regulated process.

   b. The results of sampling and analysis identifying the nature and concentration, and/or mass, where required by the standard or by Lake County, of regulated pollutants in the discharge from each regulated process. Instantaneous, daily maximum, and long-term average concentrations, or mass, where required, shall be reported. The sample shall be representative of daily operations.

6. Certification - A statement, reviewed by the industrial user's authorized representative and certified by a qualified professional engineer, indicating whether pretreatment standards are being met on a consistent basis, and, if not, whether additional operation and maintenance and/or additional pretreatment is required to meet the pretreatment standards and requirements.

7. Compliance Schedule - If additional pretreatment and/or operation and maintenance will be required to meet the pretreatment standards, the shortest schedule by which the industrial user will provide such additional pretreatment and/or operation and maintenance. The completion date in this schedule shall not be later than the compliance date established for the applicable pretreatment standard. A compliance schedule pursuant to this section must meet the requirements set out in Item 5.22 of this resolution.

8. Signature and Certification - All baseline-monitoring reports must be signed and certified in accordance with and defined in Paragraph 5.03.B of this resolution.

5.31 COMPLIANCE DATE REPORTS

Within 90 days following the date for final compliance with applicable categorical pretreatment standards, or in the case of a new source, following commencement of the discharge of wastewater in the wastewater treatment system, any industrial user subject to categorical pretreatment standards shall submit to the LCDU a report indicating the nature and concentration of all prohibited or regulated pollutants in the discharge and the average and maximum daily flow. All sampling and analysis shall be in accordance with

procedures established by U.S. EPA at 40 CFR Part 136, as amended except as provided in Paragraph 5.23.G of this resolution.

For industrial users subject to equivalent mass or concentration limits established by Lake County in accordance with the procedures in Item 5.06 of this resolution, this report shall contain a reasonable measure of the user's long-term production rate. For all other industrial users subject to categorical pretreatment standards expressed in terms of allowable pollutant discharge per unit of production (or other measure of operation), this report shall include the user's actual production during the appropriate sampling period.

This report shall state whether the applicable categorical pretreatment standards are being met on a consistent basis and, if not, what additional operation and maintenance and/or pretreatment is necessary to achieve discharge compliance with any applicable categorical pretreatment standards. This report shall contain the certification statement as set forth in Item 5.18.L of this resolution, and shall be signed by an authorized representative of the industrial user as defined in Item 5.03.B of this resolution and certified by a state registered professional engineer.

5.32 <u>PERIODIC COMPLIANCE REPORTS</u>

A. Any industrial user subject to a categorical pretreatment standard, after the compliance date of such categorical pretreatment standard, or, in the case of a new source, after commencement of discharge to the Lake County wastewater treatment system, shall submit compliance reports to Lake County on the 15th of March, June, September, and December. This reporting requirement is to be followed unless more frequent reporting is required in the categorical pretreatment standard or by the LCDU or Ohio or U.S. EPA. This report shall indicate the nature and concentration of pollutants discharged from each regulated process(es) limited by the categorical pretreatment standard.

1. In addition, this report shall include a record of all daily flows during the reporting period. At the LCDU's discretion, and in consideration of such factors as the local high or low flow rates, holidays, budget cycles, etc., the LCDU may agree to alter the months during which the periodic compliance reports are due.

B. For industrial users subject to equivalent mass or concentration limits established by Lake County in accordance with the procedures in Item 5.06 of this resolution, these periodic compliance reports shall contain a reasonable measure of the industrial user's long-term production rate. For all other industrial users subject to categorical pretreatment standards expressed in terms of allowable pollutant discharged per unit of production or other measure of operation, the periodic compliance reports shall include the industrial user's actual production rate during the appropriate sampling period. If an equivalent concentration limit has been calculated in accordance with a categorical pretreatment standard, this adjusted concentration limit shall also be submitted in these reports.

C. Any significant non-categorical industrial user discharging to the Lake County wastewater treatment system shall submit compliance reports to Lake County on the 15th of March, June, September, and December. These reports shall contain a description of the nature, concentration, and flow of the pollutants required to be reported by the industrial user's pretreatment permit. These reports shall be based on sampling and analysis performed in the period covered by the report.

D. Any other industrial users not subject to categorical pretreatment standards nor otherwise classified, as a significant industrial user shall submit periodic compliance reports as determined and required by Lake County.

E. If the industrial user's sampling data indicate a violation, the industrial user must:

1. Notify Lake County within 24 hours of becoming aware of the violation; and

2. Repeat the sampling and analysis and submit both sets of test results within 30 days unless Lake County samples the industrial user's discharge between the industrial user's self-monitoring and receipt of the analytical results, which indicate a violation. The 30-day period begins on the industrial user's receipt of the original sampling results.

F. The periodic compliance reports shall be based upon the data obtained through appropriate sampling and analysis performed during the period covered by the report, which data is representative of conditions occurring during the reporting period. The frequency of sampling shall be prescribed in the industrial user's pretreatment permit where applicable or otherwise by Lake County. This sampling and analysis may be conducted by Lake County in lieu of the industrial user. If Lake County has collected all the information required for the 90-day compliance report and/or periodic compliance reports, the industrial user may not be required to submit the reports.

G. All sampling and analyses shall be performed in accordance with procedures established in Section 304(h) of the Act, and contained in 40 CFR Part 136 and amendments thereto. Where 40 CFR Part 136 does not include a sampling or analytical technique for the pollutant in question or where the U.S. EPA determines that Part 136 sampling and analytical techniques are inappropriate for the pollutant in question, sampling and analysis shall be performed using other sampling and analytical procedures approved by the U.S. EPA.

H. The results of any additional industrial user self-monitoring, that is, monitoring not required by a categorical pretreatment standard or by the industrial user's pretreatment permit, or otherwise by Lake County, conducted during the monitoring/reporting period, and for which U.S. EPA- approved procedures under 40 CFR Part 136 or approved alternatives were used, must accompany the periodic compliance reports.

I. All periodic compliance reports shall contain the certification statement as set forth in Paragraph 5.18.L of this resolution, and shall be signed by an authorized representative of the industrial user as defined in Paragraph 5.03.B of this resolution.

5.33 <u>NOTIFICATION OF CHANGED DISCHARGE</u>

All industrial users shall promptly notify Lake County in advance of any substantial change in the volume or character of pollutants in their discharge, including the listed or characteristic hazardous wastes for which initial notification was submitted under 40 CFR 403.12(p).

5.34 <u>MONITORING FACILITIES</u>

Lake County shall require to be provided and operated at the industrial user's expense, monitoring facilities to allow inspection, sampling, and flow measurement of the building sewer and/or internal drainage systems. The monitoring facility should normally be situated on the industrial user's premises, but Lake County may, when such a location would be impractical or cause undue hardship on the industrial user, allow the facility to be constructed in the public street or sidewalk area and located so that it will not be obstructed by landscaping or parked vehicles.

There shall be ample room in or near such sampling manhole or facility to allow accurate sampling and preparation of samples for analysis. The facility, sampling, and measuring equipment shall be maintained at all times in a safe and proper operating condition at the industrial user's expense.

Whether constructed on public or private property, the sampling and monitoring facilities shall be provided in accordance with plans approved by Lake County and all applicable local construction standards and specifications. Construction shall be completed within 90 days following written notification by the Director.

5.35 <u>INSPECTION AND SAMPLING</u>

Lake County shall inspect the facilities of any industrial user to ascertain whether the purpose of this resolution is being met and all requirements are being complied with. Each significant industrial user discharging to the Lake County wastewater treatment system shall be inspected by Lake County once per year and sampled a minimum of three times per year. Persons or occupants of premises where wastewater is created or discharged shall allow Lake County or their representatives ready access at all reasonable times to all parts of the premises for the purposes of inspection, sampling, record examination, records copying, or in the performance of their duties. Lake County and Ohio EPA shall have the right to set up on the industrial user's property such devices as are necessary to conduct sampling, compliance monitoring, and/or metering operations. In addition to the charges and fees for collection and treatment of wastewater, each user shall be charged for the cost of sampling and testing at the rates identified heron. The cost of sampling by Lake County Department of Utilities shall be covered by the significant Industrial User and will be issued in a separate quarterly bill.

Setting and pick up of 24 hr. composite sampler- $250.00

Grab sample- $125.00

Metals, Total- $75.00 (Cd, Cr, Cu, Pb, Ni, Ag, As, Mo, Se, &Zn)

Metal, Individual- $10.00

Low-Level Mercury (LLHG) EPA method 1631- $210.00

Hexavalent Chromium- $20.00

Cyanide, Total- $25.00

Total Phosphorus- $20.00

Total Suspended Solids-$15.00

Total Dissolved Solids-$15.00

Oil & Grease- $40.00

Biochemical Oxygen Demand, Carbonaceous (CBOD)- $20.00

Chemical Oxygen Demand (COD)- $20.00

Ammonia as Nitrogen-$20.00

Other services or sampling will be charged at the rate of the contracted lab used by the POTW.

Where the industrial user has security measures in force which would require proper identification and clearance before entry into their premises, the industrial user shall make necessary arrangements with their security guards so that upon presentation of suitable identification, Lake County personnel will be permitted to enter, without delay, for the purposes of performing their specific responsibilities.

VI. CONFIDENTIAL INFORMATION

Information and data on an industrial user obtained from reports, questionnaires, permit application, permits and monitoring programs, and from inspections shall be available to the public or other governmental agencies without restriction unless the industrial user specifically requests and is able to demonstrate to the satisfaction of Lake County that the release of such information, processes, or methods of production is entitled to protection as trade secrets or proprietary of the industrial user.

When requested by the person furnishing a report, the portions of a report defines by the industrial user which might disclose trade secrets or secret processes shall not be made available for inspection by the public, but shall be made available upon written request to governmental agencies for uses related to this resolution, the NPDES permit, state disposal system permit, and/or the pretreatment programs; provided, however, that such portions of a report shall be available for use by the state or any state agency in judicial review or enforcement proceedings involving the person furnishing the report. Wastewater constituents and characteristics will not be recognized as confidential information.

Information accepted by Lake County as confidential shall not be transmitted to any governmental agency or to the public by Lake County until and unless a 10-day notification is given to the industrial user.

VII. ENFORCEMENT

5.36 <u>ADMINISTRATIVE ENFORCEMENT REMEDIES</u>

A. Notification Of Violation – Whenever Lake County finds that any industrial user has violated or is violating this resolution, or an industrial user pretreatment permit or order issued hereunder, the LCDU or its agent may serve upon said user a written notice of the violation. Within 10 days of the receipt date of this notice, the industrial user shall file with Lake County an explanation of the violation and a plan for the satisfactory correction and prevention thereof, to include specific required actions. Submission of this plan in no way relieves the industrial user of liability for any violations occurring before or after receipt of the Notice of Violation.

B. Consent Orders – The LCDU is hereby empowered to enter into Consent Orders, assurances of voluntary compliance, or other similar documents establishing an agreement with the industrial user responsible for the non-compliance. Such orders will include specific action to be taken by the industrial user to correct the non-compliance within a time period also specified by the order. Consent Orders shall have the same force and effect as Administrative Orders issued pursuant to Paragraph 5.27.D of this resolution below.

C. Show Cause Hearing – The LCDU may order any industrial user, which causes or contributes to violation of this resolution, industrial user pretreatment permit, or order issued hereunder, to show cause why a proposed enforcement action should not be taken. Notice shall be served on the industrial user specifying the time and place for the hearing, the proposed enforcement action, and the reasons for such action, and a request that the industrial user show cause why this proposed enforcement action should not be taken. The notice of the hearing shall be served personally or by registered or certified mail (return receipt requested) at least 10 days prior to the hearing. Such notice may be served on any principal executive, general partner, or corporate officer, or to the principle place of business of the industrial user. Whether or not a duly notified industrial user appears as noticed, immediate enforcement action may be pursued.

D. Compliance Order – When the LCDU finds that an industrial user has violated or continues to violate this resolution or a permit or order issued hereunder, the LCDU may issue an order to the responsible industrial user directing that, following a specified time period, sewer service shall be discontinued unless adequate treatment facilities, devices, or other related appurtenances have been installed and are properly operated. Orders may also contain such other requirements as might be reasonably necessary and appropriate to address the non-compliance, including the installation of pretreatment technology, additional self-monitoring, and management practices.

E. Cease And Desist Orders – When Lake County finds that an industrial user has violated or continues to violate this resolution or any permit or order issued hereunder, the LCDU may issue an order to cease and desist all such violations and direct those persons in non-compliance to:

1. Comply forthwith

2. Take such appropriate remedial or preventive action as may be needed to properly address a continuing or threatened violation, including halting operations and terminating the discharge.

F. Administrative Fines – Notwithstanding any other section of this resolution and in accordance with the authority vested by 40 CFR 403.8 E(vi)(A); OAC 3745-3-03; R.C. 119.03; R.C. 6111.03(Q); R.C. 6111.042; and the LCDU Industrial Pretreatment Enforcement Plan; any industrial user who is found to have violated any provision of this resolution, or permits and orders issued hereunder, may be fined in an amount not to exceed $1,000.00 per violation per day. Each day on which non-compliance occurs or continues shall be deemed a separate and distinct violation. Such assessments may be added to the industrial user's next scheduled sewer service charge and the LCDU shall have such other collection remedies as the LCDU has to collect other service charges. Unpaid charges, fines, and penalties shall constitute a lien against the individual user's property. Industrial users desiring to dispute such fines must file a request for the LCDU to reconsider the fine within 10 days of being notified of the fine. Where the LCDU believes a request has merit, the LCDU shall convene a hearing on the matter within 15 days of receiving the request from the industrial user, or as soon as practical thereafter.

G. Emergency Suspensions

1. The LCDU may suspend the wastewater treatment service and/or pretreatment permit of an industrial user whenever such suspension is necessary in order to stop an actual or threatened discharge presenting or causing an imminent or substantial endangerment to the health or welfare of persons, the wastewater treatment system, or the environment.
2. Any industrial user notified of a suspension of the wastewater treatment service and/or the pretreatment permit shall immediately stop or eliminate its contribution. In the event of a user's failure to immediately comply voluntarily with the suspension order, the LCDU shall take such steps as deemed necessary, including immediate severance of the sewer connection, to prevent or minimize damage to the Lake County wastewater treatment system, its receiving stream, or endangerment to any individuals. The LCDU shall allow the industrial user to recommence its discharge when the endangerment has passed, unless the termination proceedings set forth in Paragraph 5.27.H of this resolution are initiated against the industrial user.

3. An industrial user which is responsible, in whole or in part, for imminent endangerment shall submit a detailed written statement describing the causes of the harmful contribution and the measures taken to prevent any future occurrence to the LCDU within 15 days of the date of the occurrence.

H. Termination Of Permit – Significant industrial users proposing to discharge into the Lake County wastewater treatment system must first obtain an industrial user pretreatment permit from the LCDU. Any user who violates the following conditions of this resolution, or an industrial user pretreatment permit or order, or any applicable state or federal law, may be subject to permit termination for:

1. Violation of permit conditions
2. Failure to accurately report the wastewater constituents and characteristics of its discharge
3. Failure to report significant changes in operations or wastewater constituents and characteristics
4. Refusal of reasonable access to the user's premises for the purpose of inspection, monitoring, or sampling.

Non-compliant industrial users will be notified of the proposed termination of their permit and be offered an opportunity to show cause under Paragraph 5.27.C of this resolution why the proposed action should not be taken.

5.37 JUDICIAL REMEDIES

If any person discharges sewage, industrial wastes, or other wastes into the Lake County wastewater treatment system contrary to the provisions of this resolution or any order or permit issued hereunder, the LCDU, through the office of the Lake County Prosecuting Attorney, in addition to other remedies may commence an action for appropriate legal and/or equitable relief in the appropriate local court for Lake County.

A. Injunctive Relief – Whenever an industrial user has violated or continues to violate the provisions of this resolution or permit or order issued hereunder, the LCDU, through counsel, may petition the court for the issuance of a preliminary and permanent injunction or both which restrains or compels the activities on the part of the industrial user. The LCDU shall have such remedies to collect these fees, as it has to collect other sewer service charges.

B. Civil Penalties

1. Any industrial user who has violated or continues to violate this resolution or any order or permit issued hereunder, shall be liable to Lake County for a civil penalty. The LCDU or its designee has the authority to assess civil penalties in an amount not to exceed $1,000 plus actual damages incurred by the POTW per violation per day for as long as the violation continues.

In addition to the above described penalty and damages, the LCDU may recover court costs, and other expenses associated with the enforcement activities including sampling and monitoring expenses. This provision shall not be construed to prohibit the LCDU or its designee from assessing fines in an amount less than $1,000 per violation per day if the circumstances, in any estimation of the LCDU or its designee, warrant a lesser fine.

2. The LCDU may petition the court to impose, assess, and recover such sums. In determining the amount of liability, the court shall take into account all relevant circumstances, including, but not limited to, the extent of harm caused by the violation, the magnitude and duration, any economic benefit gained through the industrial users violation, corrective actions by the industrial user, the compliance history of the user, and any other factor as justice requires.

C. Criminal Prosecution

1. Violations - Any industrial user who willfully or negligently violates any provision of this resolution or any order or permit issued hereunder shall, upon conviction, be punished by a fine and/or imprisonment. Lake County shall have the authority to assess criminal penalties in at least the amount of $1,000 per violation per day. This provision shall not be construed to prohibit the County from assessing fines in an amount less than $1,000 if the circumstances, in the estimation of the County, warrant a lesser fine.

2. Falsifying Information – Falsification may be a criminal offense under Ohio Revised Code Section 2921.13. Behavior which may violate the law includes but is not limited to: any false statements, representations, or certifications in any application, record, report, plan, or document filed or required to be maintained. Falsification is punishable by a fine of not more than $1000.00, imprisonment of not more that six months, or both.

D. Supplemental Enforcement Remedies

1. Annual publication of Significant Non-compliance: Lake County shall publish, at least annually in the largest daily newspaper circulated in the service area, a description of those industrial users, which are found to be in significant non-compliance as defined in Paragraph 5.03.UU of this resolution.

2. Prohibited Wastewater Surcharge: In addition to all enforcement mechanisms in this section, each industrial user found to be in non-compliance will be subject to charges for the handling, treatment, removal, and disposal of all identified, prohibited materials or conditions that are

discharged to the Lake County wastewater treatment system prior to the corrections being made in accordance with the surcharge scheduled in Item 5.12 of this resolution. Such surcharges do not relieve the industrial users of their obligation to take prompt action in achieving compliance.

VIII. RECORDS RETENTION

All industrial users subject to this resolution shall retain and preserve for not less than 3 years, any records, books, documents, memoranda, reports, correspondence, and any and all summaries thereof, relating to monitoring, sampling, and chemical analysis made by or on the behalf of an industrial user in connection with its discharge. All records which pertain to matters which are the subject of administrative adjustment or any other enforcement or litigation activities brought by Lake County pursuant to this resolution shall be retained and preserved by the industrial user until all enforcement activities have concluded and all periods of limitation with respect to any and all appeals have expired.

Section 6 – Approved Equipment & Material

Section 6 has been removed from the Rules and Regulations. The Approved Materials List can be found on the Lake County Department of Utilities Website at:

http://www.lakecountyohio.gov/utilities/RulesRegulations.aspx

Section 7 – Fee Schedule

SECTION 7 – FEE SCHEDULE

FEES ARE SUBJECT TO CHANGE

PLEASE CONTACT LCDU FOR A CURRENT FEE SCHEDULE.

Metered Water Service Charge:

- $3.84 per 100 cubic feet for the first 1,200,000 cubic feet metered water per quarter
- $2.88 for each 100 cubic feet in excess of 1,200,000 cubic feet per quarter
- Minimum Charge: $34.56 per quarter

Metered Wastewater Service Charge:

- $3.87 per 1000 gallons metered water use
- Minimum Charge: $81.27 per quarter per premises

Residential Wastewater Service Charge:

- $81.27 per quarter - flat rate

Billing Service Charge (For Communities that use LCDU Billing Services Only):

- $4.50 per Billing Cycle

Septic Disposal Fees:

- $0.06 per gallon
- Permit Fee: $100.00 per vehicle per year

Water Line Tapping Fees:

Tap Size	Labor	Material	Total
1” Service*	$300.00	$525.00	$825.00
1 ½” Service*	$300.00	$740.00	$1040.00
2” Service**	$360.00	$100.00	$460.00
4” Service**	$360.00	$0.00	$360.00
6” Service**	$360.00	$0.00	$360.00
8” Service**	$360.00	$0.00	$360.00
Pretaped	$35.00	$90.00	$125.00

* Connection to main, meter installation and inspection fee included in this cost

** Tapping fees for taps 2” and larger include 3 hours of crew time. Any time beyond that will be charged to the customer.

Large Meter Quarterly Fee:

Meter Size	Quarterly Fee
2”	$25.00
3”	$55.00
4”	$75.00
6”	$110.00
8”	$125.00

Inspection:

Water, Simple Connection (1-inch)	$70.00
Sanitary, Simple Connection	$100.00
Project Hourly Rate (Including Travel Time)	$40.00 per Hour
Sewer Deduct Meter (Per Visit)	$100.00

Note: A permit is required for residential sewer or waterline repairs, but no inspection fee will be charged.

Unmetered fire supply flat rate charges:

Line Size	Quarterly Fee
2”	$18.00
4”	$51.00
6”	$80.00
8”	$96.00
10”	$100.00
12”	$105.00

*In accordance with section 1.42.H.

Non Residential Treatment Plant Capacity Fee Table ***			
Meter Size		Water	Sewer
0.5		$2,667.00	$5,705.00
0.75		$2,667.00	$5,705.00
1		$4,000.00	$8,558.00
1.5		$6,667.00	$14,263.00
2		$13,333.00	$28,525.00
3		$21,333.00	$45,640.00
4		$40,005.00	$85,575.00
6		$66,667.00	$142,625.00
8		$133,333.00	$285,250.00
Residential (per unit)		$1,000.00	$2,282.00

*** Additional fees may apply depending on service location. For example, local tap in fees, inspection fees, assessments, pump station capacity fees may apply.

Solid Waste Disposal Fees:

Item	Disposal Fee
- Car Load – up to 206 lbs. (minimum charge)	$3.00
- Pickup Truck Load – up to 360 lbs. (minimum charge)	$5.00
- Appliances – White Metal (each)	$5.00
- Car Tires – no rims, 6 max., up to 15" only (each)	$3.00
- Pickup Truck Tires – no rims, 6 max., 16" up to 900 x 20 (each)	$5.00
- Semi Truck Tires – no rims, 6 max., no larger than 10.00 x 20 (each)	$15.00
- Vehicle Weight Only	$5.00
- Weighed Waste Charge, Deposited in Building	
Waste Generated Inside Lake County	$32.00/Ton
(Includes Host, State, District, and Generation Fees)	
Waste Generated Outside Lake County, Inside Ohio	See Note 1
(Includes Host, State, District, and Generation Fees)	
- Weighed Waste Charge, Deposited on Landfill Face	
Waste Generated Inside Lake County	$30.00/Ton
(Includes Host, State, District, and Generation Fees)	
Waste Generated Outside Lake County, Inside Ohio	See Note 1
(Includes Host, State, District, and Generation Fees)	
Clean Excavated Soil	$5.00/Load

Note 1: All Weighed Waste Charges are subject to a Basic Fee, plus a Host Fee, plus a State Fee, plus an Out-of District Fee, a Local In-district Fee, and a Generation Fee. The total fee charge will vary Depending on the county that the waste is generated in. Contact LCDU regarding fees for waste generated outside of Lake County.

Note 2: The Lake County Solid Waste District Employees will determine whether a load is to be dumped in the drop-off building or directly in the landfill. The decision will depend on, among other things, the weather, the condition of the landfill roadways, and the condition of the vehicle carrying the load.

Note 3: All fees, excepting those portions of fees designated as "Labor" costs will be increased when the Metered Service Changes are increased by the Board of Commissioners by resolution. The increase for these fees will be by the same percent as the increase in the Metered Service Changes. The labor portion of the fees will be increased automatically as labor costs to the County increase.

Miscellaneous And Administrative Charge Schedule:

- Reconnection after Turn Off of Water to Customer $25.00
- Turn ON or OFF of Account after regular working hours**** $85.00
- Reseal meter which has been tampered with $50.00
- Dishonored payment fee (insufficient funds fee)…….. $25.00
- Delinquent Bill Late Fee..... Up to 20% of the unpaid balance
- Billing Administrative Fee .....15% of the amount certified
- Customer requested bench flow test 5/8", ¾" or 1" meter $25.00
- Flow Test 1 1/2" or larger meter ..... Actual Cost
- Charge per copy, Rules and Regulations $50.00
- Sewer/ Water Line Builder License Fee……. $50.00
- Meter Sales – ¾", 1" & 1 1/2" meters……..Actual Cost
- Hydrant meter Rental ..... $25.00 per mo.
  Deposit - ¾" & 1" meters***** $200.00
  Deposit – 1 ½" meters***** $1000.00

Customer requested Hydrant flow Test $250.00

- Lateral Extension Deposit..... $500.00
- Tampering Fine (Per Ohio Revised Code) $100.00
- Copying 2' x 3' Drawing Sheets
  First Two Sheets..... $0.00
  Each Sheet after First Two $1.00

**** Turn ons and turn offs must be scheduled by 12 noon. An after hours charge must be paid when a turn on or turn off is scheduled after 12:00 noon and same day service is requested.

***** Hydrant meter usage is calculated monthly at the current "Metered Service Charge" rate and is charged against the deposit. The deposit is reviewed monthly and renewed as needed. Any remaining balance is adjusted to zero when the rental is terminated. Hydrant meter season is April 15 thru October 31.