Lake County Soil and Water Conservation District

Technical Bulletin # 10-003

Subject: Erosion Control on Your Lot

125 East Erie Street, Painesville, OH 44077 1-440-350-2730

Why Erosion Control?

Sediment, the product of erosion is the largest pollutant in our state's streams. Once eroded soil enters even a small flow of water, it is carried long distances in ditches, storm sewers and streams.

Erosion damages water quality by raising water temperatures, reducing sunlight, clogging the gills of animals, lowering oxygen levels, covering food sources, eliminating habitat, and transporting oil, fertilizers, metals, chemicals and other pollutants.

Yard Inlet Control

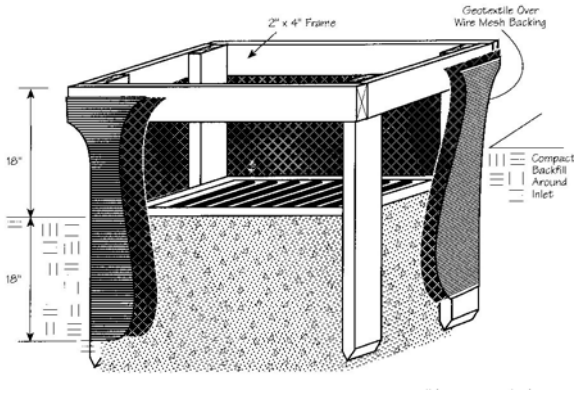

This wood framed, wire and fabric structure can be easily made, and used to keep sediment from washing into the storm sewer inlet. After grass is growing in the yard, the structure can be removed.

Erosion Hurts Us & Our Community

A single acre under construction can lose 1 ½ dump truck loads of soil to erosion. No one would dream of dumping that much soil onto their neighbor or into a stream, yet building a home can do the same thing. Landscaping costs increase as fertile topsoil is washed away. Erosion has also washed away foundations, putting homes at risk of collapse.

Eroded material can clog storm sewers. This increases maintenance costs for the community. Sediment deposits block streams, cause flooding and contribute to increased stream bank erosion. Finally, each year tons of sediment are dredged from clogged harbors at public expense. How we build can limit erosion.

What Can I Do?

- Don't build on steep slopes
- Don't strip vegetation unless it is necessary
- Mulch or seed bare ground as soon as possible
- Keep your soil out of the street
- Make heavy equipment use the driveway during construction
- Keep your soil out of the storm sewers
- Keep your soil out of ditches and small channels
- Get grass growing quickly
- Know if there are wetlands on your lot
- Obtain the proper permits

Silt Fence

Silt fences are a sediment-trapping practice utilizing a geotextile fence, topography and sometimes vegetation to cause sediment deposition. Silt fence reduces runoff's ability to transport sediment by ponding runoff and dissipating small rills of concentrated flow into uniform sheet flow. Silt fence is used to prevent sediment-laden sheet runoff from entering into downstream creeks and sewer systems.

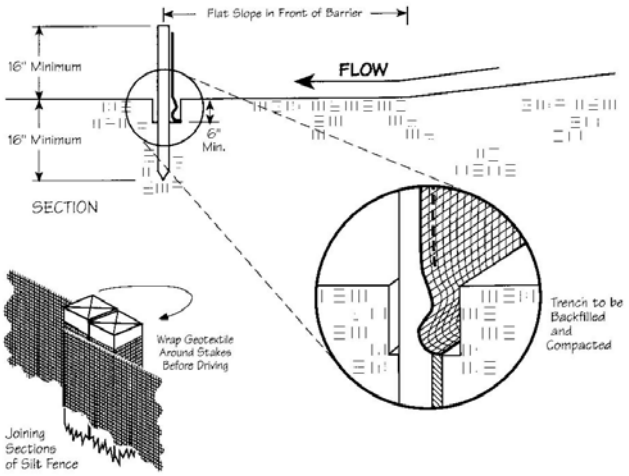

Take Precautions – Plan and Implement

It is not difficult to predict where soil will erode. The slightest down hill slope will let water flow, and any flow over bare ground will create erosion. The goal is to keep all the soil on your own property. Plan ahead for erosion control. The appropriate use of the illustrated practices and techniques will control erosion in many situations. Call the Soil & Water Conservation District for planning assistance.

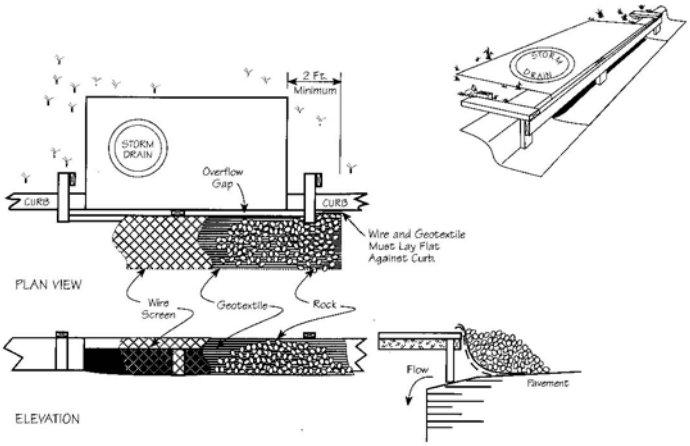

Curb Inlet Control

Storm drain inlet protection devices remove sediment from storm water before it enters storm sewers and downstream areas. Inlet protection devices are sediment barriers that may be constructed of washed gravel or crushed stone, geotextile fabrics and other materials that are supported around or across storm drain inlets.

Inlet protection is installed to capture some sediment and reduce the maintenance of storm sewers and other underground piping systems prior to the site being stabilized. Due to their poorer effectiveness, inlet protection is considered a secondary sediment control to be used in conjunction with other more effective controls.

Seeding – The Ultimate Solution

A good grass cover provides the ultimate solution to erosion. Therefore, the goal should be to establish a seeding or at least apply temporary cover as soon as the earth moving stops. The good news is that some form of cover can be applied at any time of the year.

- The best times of the year to plant a permanent grass cover are from ***March 1 to May 31*** and from ***August 1 to September 30.*** Grass can also be planted during June and July, but will need additional watering.
- Seedings should not be planted from **October 1 through November 20**. During this period the seeds are likely to germinate but may not survive the winter. During this time however, the seedbed could be prepared, limed, fertilized and properly mulched. After November 20, seeding rates can be increased by 50% and the seed applied. By late November it is usually cold enough that the seed will not germinate until spring. But, in spring, the grass will be well established by the time we usually think about doing yard work.
- **Mulch is Important!** Mulch is important to help get a seeding started. It provides temporary erosion control to hold the soil and seed in place until the grass can grow. It also helps keep the growing area moist and protects the seedlings in other ways as well. The mulch cover is adequate when the bare ground is no longer visible.
- Mulch alone will greatly reduce the erosion on a site and should be applied and maintained until a permanent seeding can be made.

Other Practices & Techniques

Grass filter strip
Forested buffer strip
Level spreader
Stream bank stabilization
Sediment trap
Check dam
Slope drain
Matting
Construction entrance

See your SWCD for more information from the Rainwater & Land Development Manual

Your Soil & Water Conservation District Can:

Provide soil descriptions of your lot and describe problems you may encounter on your site.

Advise on drainage, erosion, stream bank, habitat and land management problems.

Provide soil maps, topographic maps, wetlands maps, aerial photographs and more.